GENVIK
WE MAKE IT BETTER

HORIZONTAL & VERTICAL
Multistage Centrifugal Pumps - 50Hz

CE | An ISO 9001 Company

MARSHALLING THE POWER OF TECHNOLOGY TO PROVIDE COST EFFECTIVE PUMPING SOLUTIONS

Genvik is one of the emerging leaders in the world with the capability and the resources to provide pumping solutions that are not only cost effective but contributes to better productivity. As a technology oriented company Genvik has made major investments to stay on the cutting edge of pump manufacture. While the focus is on industrial pumps, Genvik has also developed pumping systems for diverse applications.

Genvik pumps are manufactured at ISO 9001&14001 facilities, equipped with state of art testing equipments and highly sophisticated machinery. Design and manufacture are carried out under digital environment for zero defect product turn out.

Backed by strong customer service and a willingness to listen to customer perceptions and needs, Genvik is a name to reckon with in the world of pumps.

VISION

To always stay on the cutting edge of pump and other accessories manufacture. with special emphasis on industrial pumps, to ensure that customers across the globe enjoy the benefits of our efforts to provide world class products.

MISSION

By embracing technology coupled with innovative thinking, we will meet customer expectations for high performance products with affordability as a key factor. We seek to do it by staying open to the latest developments in the field, by being proactive and optimistic and through teamwork, resourcefulness and commitment.

CONTENTS

Horizontal Multistage Centrifugal Pumps	3
General Information	4
Technical Data & Materials of Construction	5
Group Performance Curves	6
Cross Sectional Drawing	7
Performance Data & Curves	8-11
Dimensional Drawings	12
Vertical Multistage Centrifugal Pumps	13
General Information	14
Technical Data & Materials of Construction	15
Group Performance Curves	16
Cross Sectional Drawing	17-19
Performance Data & Curves	20-51
Dimensional Drawings	52-66
Conversion Chart	67-68

HORIZONTAL MULTISTAGE CENTRIFUGAL PUMPS

DESCRIPTION

Genvik Horizontal Multistage Centrifugal Pumps are specially designed to facilitate pressure boosting and are best suited for wide range of applications. The components of this pump such as impellers, diffusers and shaft are made of high quality stainless steel to resist corrosion and ensures smooth operation for safe and hygienic drinking water systems. This pump with single phase motors are built with thermal overload protection. To prevent leakage and ensures less friction high quality mechanical seals are used.

MODEL IDENTIFICATION

K H-★ ★★/★★-★

Phase / Connection / Frequency
S - Single Phase (PSC) / 50Hz
T - Three Phase (DOL) / 50Hz
D - Three Phase (SD) / 50Hz

No of impellers
02,03,04,05,06,07,08,09,...

Nominal Flow range in m³/h
(2.5 = 2.5, 5 = 5, 7.5 = 7.5,
50 = 50, 100 = 100, 125 = 125)

Types of Material of Constructions
Pump Casing / Pump Base / Pump Bracket / Impeller
C - SS 304 / Mild Steel / Cast Iron / SS 304
P - SS 304 / Mild Steel / Cast Iron / Plastic
S - SS 304 / Mild Steel / Cast Steel 304 / SS 304
N - SS 316 / Mild Steel / Cast Steel 316 / SS 316

Horizontal Multistage Centrifugal Pump

Genvik

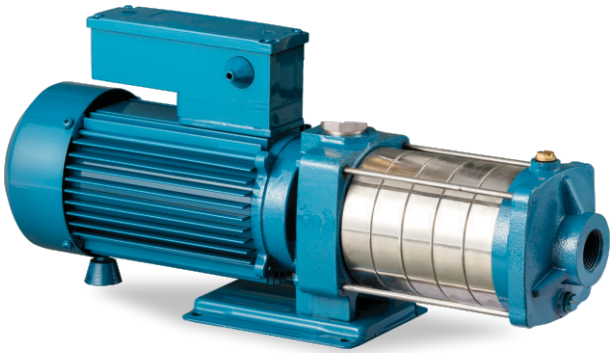

FEATURES	APPLICATIONS
Balanced and rigid construction	Agriculture & Irrigation
High mechanical stability	Household water supply
Corrosive resistant SS parts	Pressure boosting
Inbuilt thermal overload protector in all single phase pumps	Car service station
Ensures long lasting performance	Gardening
Optimal design	

The Given details / drawings / specifications are subject to change without prior notice.

PUMPED LIQUIDS

Non-aggressive, non explosive, pure, cold, fresh water without abrasive particles having the following characteristics.

pH	6.5 to 8.5
Turbidity	50 ppm silica scale (max.)
Viscosity	1.75×10^{6} m^2/sec (max.)
Hardness (Drinking Water)	300 (max.)
Specific gravity	1.004 (max.)
Allowable solids	3000 ppm (max.)
Chlorine ion density	500 ppm (max.)

PERFORMANCE CURVES CONDITIONS

- The performance curves show pump performance of the pump at rated speed and voltage. (2900 rpm)
- The measurements were made with airless water at 20°C. For pumping liquids with a density higher than that of water, motors with correspondingly higher outputs must be used.
- Pipe friction losses have not been included in the performance curves and performance data.
- The bold curves indicate the recommended performance range.
- Efficiency curve : ("EFF%") shows pump stage efficiency.
- Curve tolerance according to ISO : 9906, Grade 3B.
- The performance are at rated voltage and only indicative. Actual discharge depends on availability of water in well, based on strength of water source & height of water column.
- The given performance are for a specific materials of construction of pumps.

The Given details / drawings / specifications are subject to change without prior notice.

PUMPS

Inlet & Outlet size	1" x 1" & 1¼" x 1", 1½" x 1¼", 1½" x 1½"
Suction Lift up to	7 m / 23 feet
Flow range upto	2.5, 5, 8 & 12 m^3/h
Max. head up to	53 m
Max. allowable liquid temperature	90°C
Max. working pressure	2.5 & 5 m^3 = 10 bar at 0°C to 40°C & 6 bar at 41°C to 90°C 8 & 12 m^3 = 10 bar at 0°C to 55°C & 6 bar at 56°C to 90°C
Sealing type	Mechanical Seal / Carbon Ceramic

MOTORS

Power range	0.40 to 3.50 kW 1 Ph 220/240V, A.C - Supply (Permanent split capacitor - PSC) incorporated with Thermal Over Load Protector. 3 Ph 380/415V, (D.O.L)
Speed	2900 rpm
Protection	IP 54
Insulation Class	'B / F'
Number of starts per hour	100 times
Duty	S1 continuous
Rotation Sequence	Anti clockwise viewed from driving end
Ambient Temperature	40°C

MATERIALS OF CONSTRUCTION

Part Name	Material
Pump Casing	C.I (Cast Iron)
Impeller	AISI 304 (Stainless Steel)
Pump Stage Casing	AISI 304 (Stainless Steel)
Pump Bracket	C.I (Cast Iron)
Motor Frame	Aluminium
Rotor shaft	AISI 410 (Stainless Steel)
Mechanical Seal	SiC / Graphite Carbon
Distance Sleeve	AISI 304
Terminal Box	EP (Engineer Plastic / Thermoplastic)

The Given details / drawings / specifications are subject to change without prior notice.

GROUP PERFORMANCE CURVES

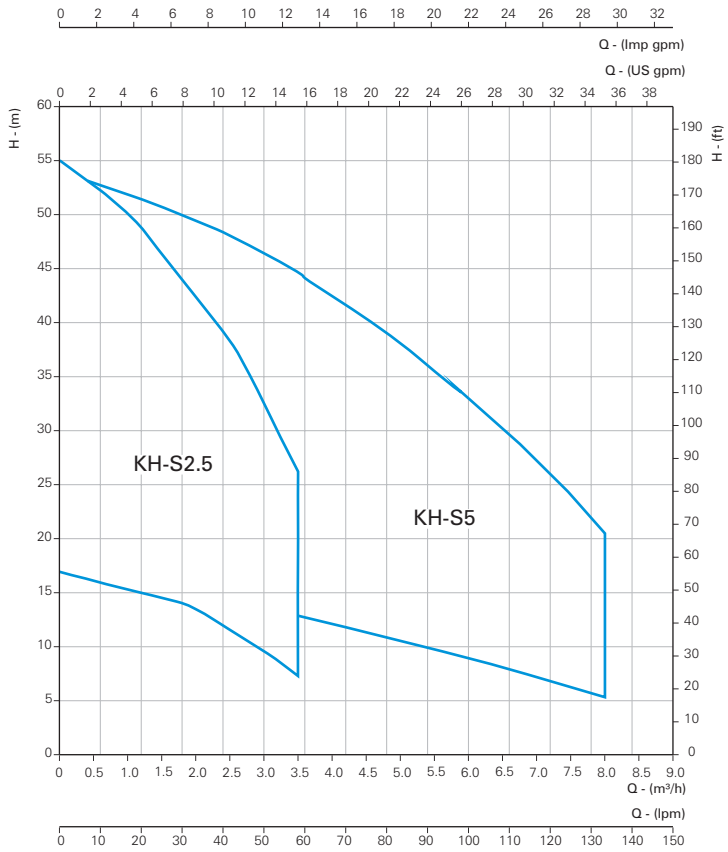

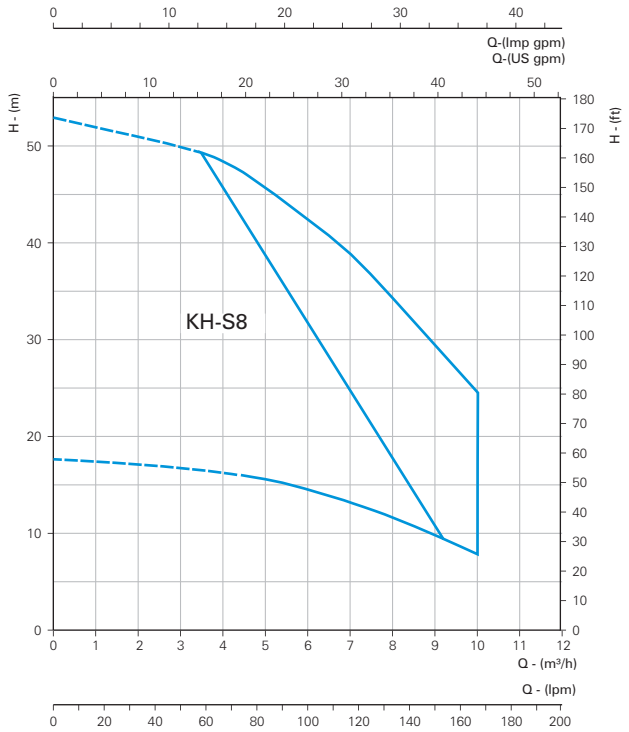

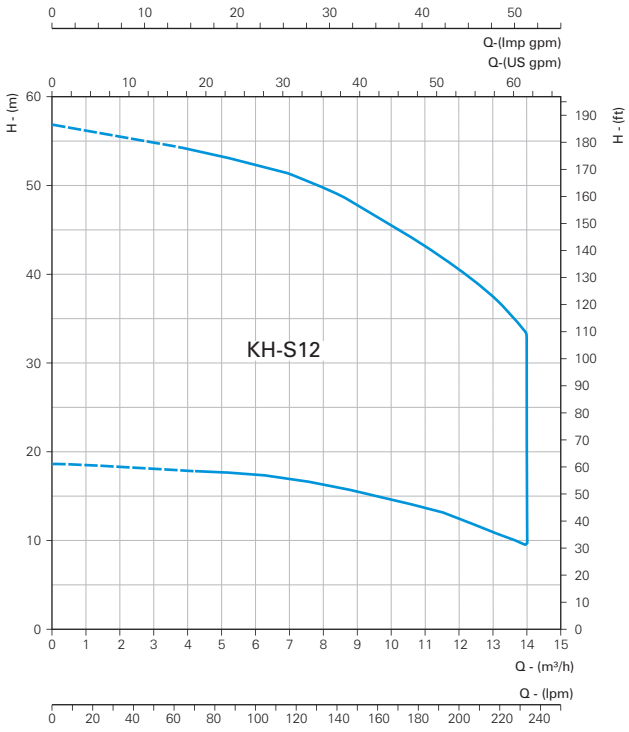

CROSS SECTIONAL DRAWING

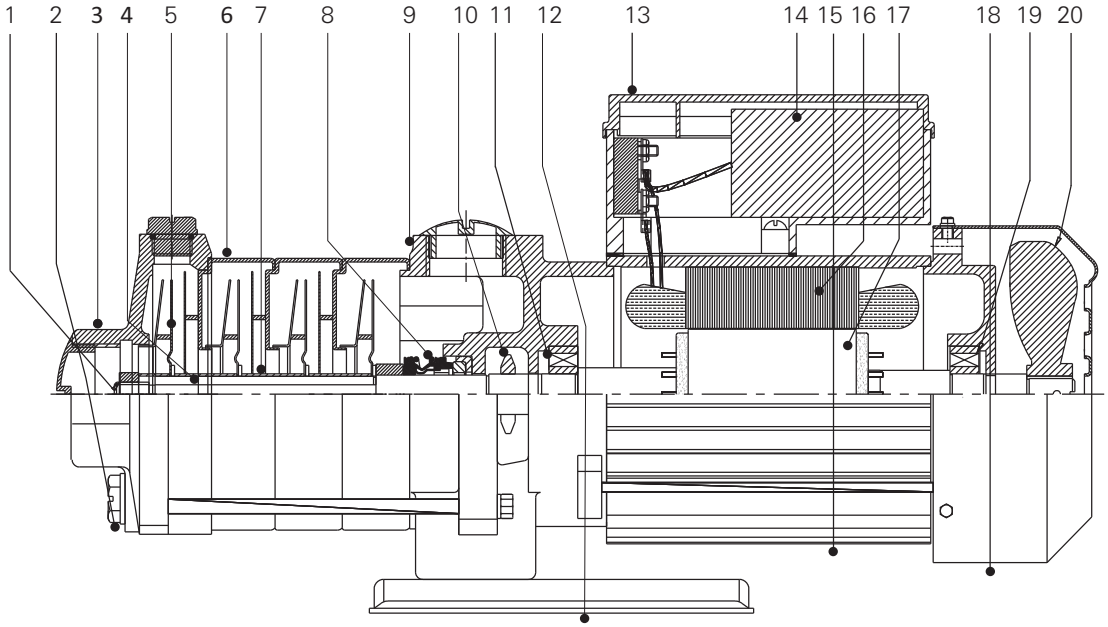

Sl. No.	Components
1	Impeller lock nut
2	Drain plug with 'O' ring
3	Pump Casing
4	Rotor-shaft
5	Impeller
6	Pump Stage casing
7	Mechanical seal
8	Deflector
9	Ball bearing (Front)

Sl. No.	Components
10	Pump Base plate with bolt
11	Terminal box cover
12	Capacitor (Single phase only)
13	Motor frame
14	Wound stator
15	Rotor-shaft
16	Cooling fan cover
17	Ball bearing (Rear)
18	Cooling fan

The Given details / drawings / specifications are subject to change without prior notice.

Nominal Flow	2.5 m³/h
Model	KH-2.5
Pipe Size	1"x 1" (NPT)

PERFORMANCE CURVES & DATA

Model	Input Power kW	lpm	0	16.2	24.6	33	41.4	49.8	58.2
		m³/h	0	1	1.5	2	2.5	3	3.5
KH-S2.5/02-S	0.40	TOTAL DYNAMIC HEAD IN METRES	17	16	14	13	12	9	7.5
KH-S2.5/03-S	0.46		27	24	23	21	18.5	16	12.5
KH-S2.5/04-S	0.60		37	33	32	29	26	22	17.5
KH-S2.5/05-S	0.75		47	43	40	37	33	27.5	22
KH-S2.5/06-S	0.92		55	50	47.5	43.5	38.5	32.5	26.5

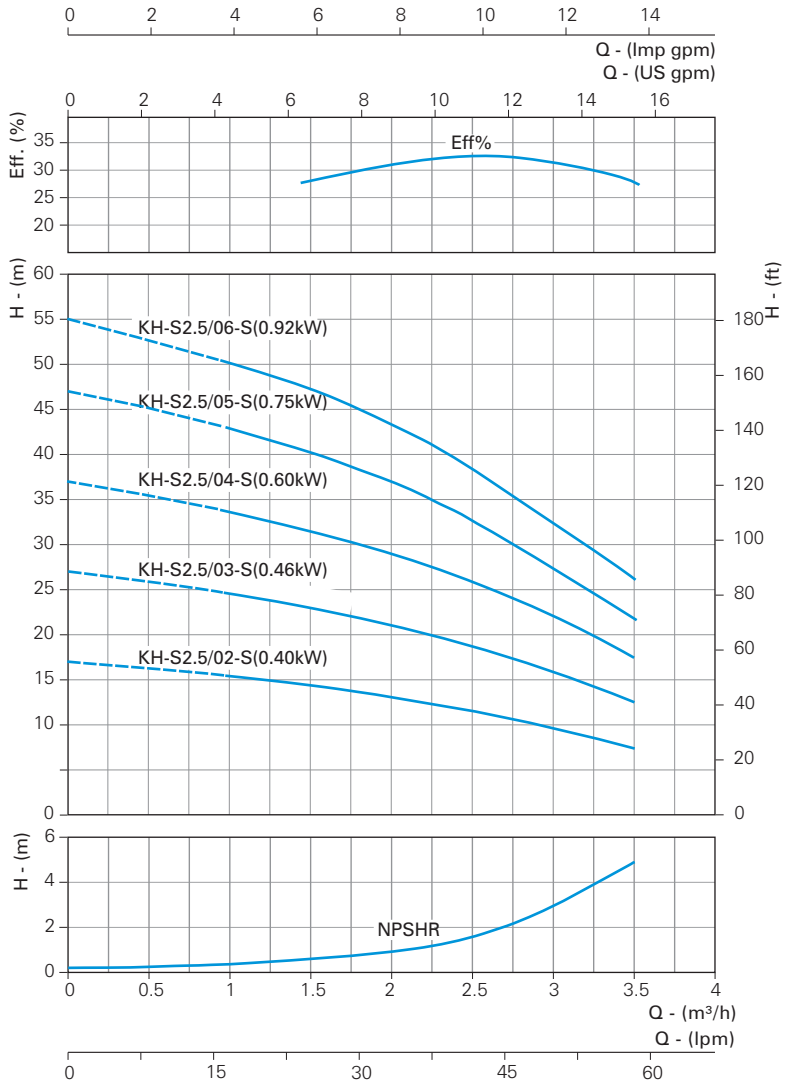

The final digit of the model identification "S" denotes 1 Phase & which will be replaced with "T" in case of 3 Phase D.O.L Motors.

Nominal Flow	5 m³/h
Model	KH-5
Pipe Size	1"x 1" 1¼"x1" (NPT)

PERFORMANCE CURVES & DATA

Model	Input Power kW	lpm	0	33	49.8	66.6	82.8	99.6	116.4	133.2
		m³/h	0	2	3	4	5	6	7	8
KH-S5/02-S	0.53	TOTAL DYNAMIC HEAD IN METRES	17	15	13.5	12.5	11	8	7	5
KH-S5/03-S	0.75		26.5	23	22	19.5	17	13	12	8
KH-S5/04-S	0.92		35	31	28.5	26	23	18	16	12
KH-S5/05-S	1.20		45	40	38	34	31	24	22	15
KH-S5/06-S	1.36		54	49.5	47	43	38	30	22	20

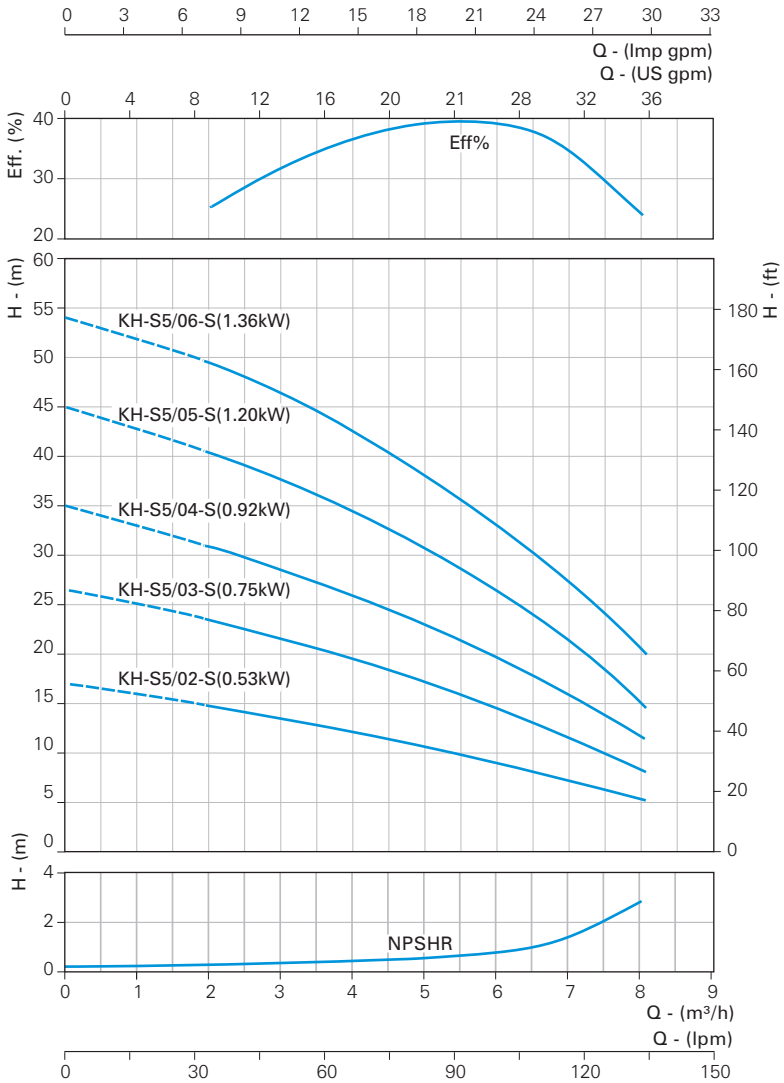

The final digit of the model identification "S" denotes 1 Phase & which will be replaced with "T" in case of 3 Phase D.O.L Motors.
The Given details / drawings / specifications are subject to change without prior notice.

Nominal Flow	8 m³/h
Model	KH-8
Pipe Size	1½"x 1¼" (NPT)

PERFORMANCE CURVES & DATA

Model	Input Power kW	lpm	0	49.8	66.6	82.8	99.6	116.4	133.2	150	166.2
		m³/h	0	3	4	5	6	7	8	9	10
KH-S8/01-S	0.75	TOTAL DYNAMIC HEAD IN METRES	17.5	17	16.5	16	14	13	12	10	8
KH-S8/02-S	1.30		27.5	26	26	24	23	22	19	17	13.5
KH-S8/02-SE	1.50		35	32	31	29	27.5	25	22	18.5	16
KH-S8/03-S	1.80		46	43	42	39	37	33	29	25	22.5
KH-S8/03-SE	2.20		53	49	47.5	45	42.5	38.5	34	29	24.5

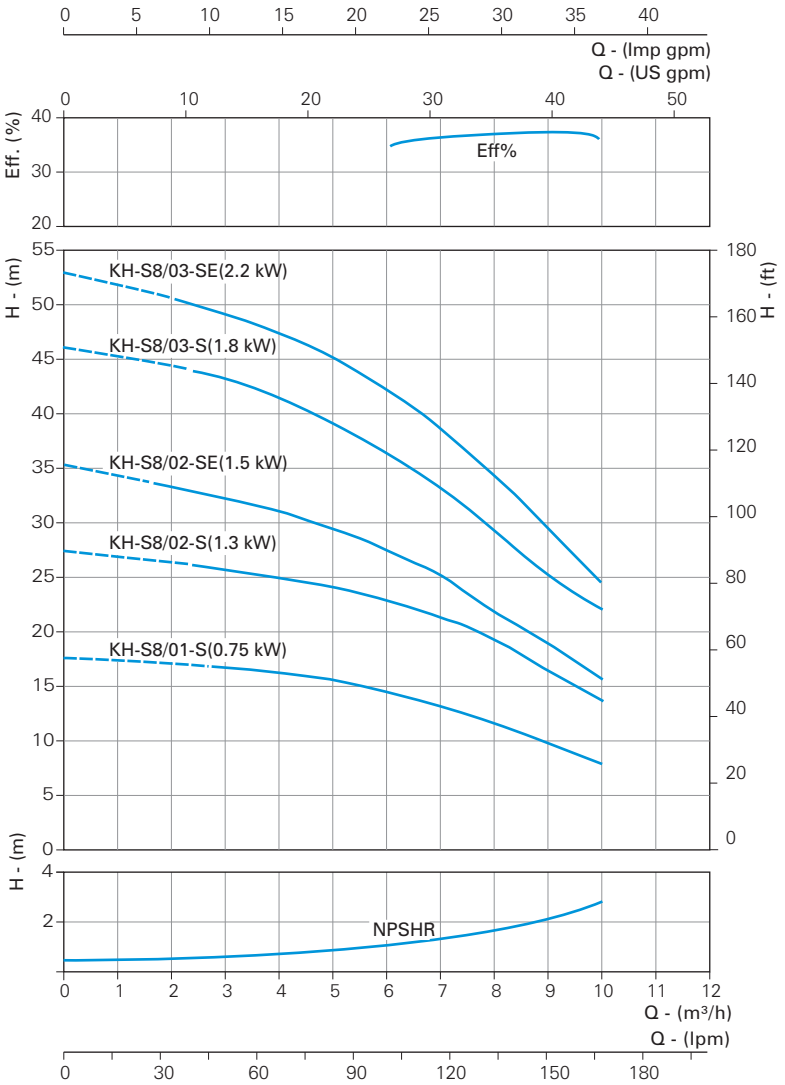

* E denotes elevated head model.

The final digit of the model identification "S" denotes 1 Phase & which will be replaced with "T" in case of 3 Phase D.O.L Motors.

Nominal Flow	12 m³/h
Model	KH-12
Pipe Size	1½"x1½" (NPT)

PERFORMANCE CURVES & DATA

Model	Input Power kW	lpm	0	33	66.6	99.6	133.2	166.2	202.8	232.8
		m³/h	0	2	4	6	8	10	12	14
KH-S12/01-S	1.10	TOTAL DYNAMIC HEAD IN METRES	18.5	18.2	18	17.5	16.5	14.5	12.5	10 (13.8)
KH-S12/02-S	1.60		28.5	17.5	27	26	24	21	17.5	13
KH-S12/02-SE	2.20		36	35.5	34.5	33.5	32	28.5	24.5	21
KH-S12/03-S	2.60		47	46	44	42.5	44.5	36	31	26
KH-S12/03-SE	3.30		57	56	54	52.5	50	46	41	33.5

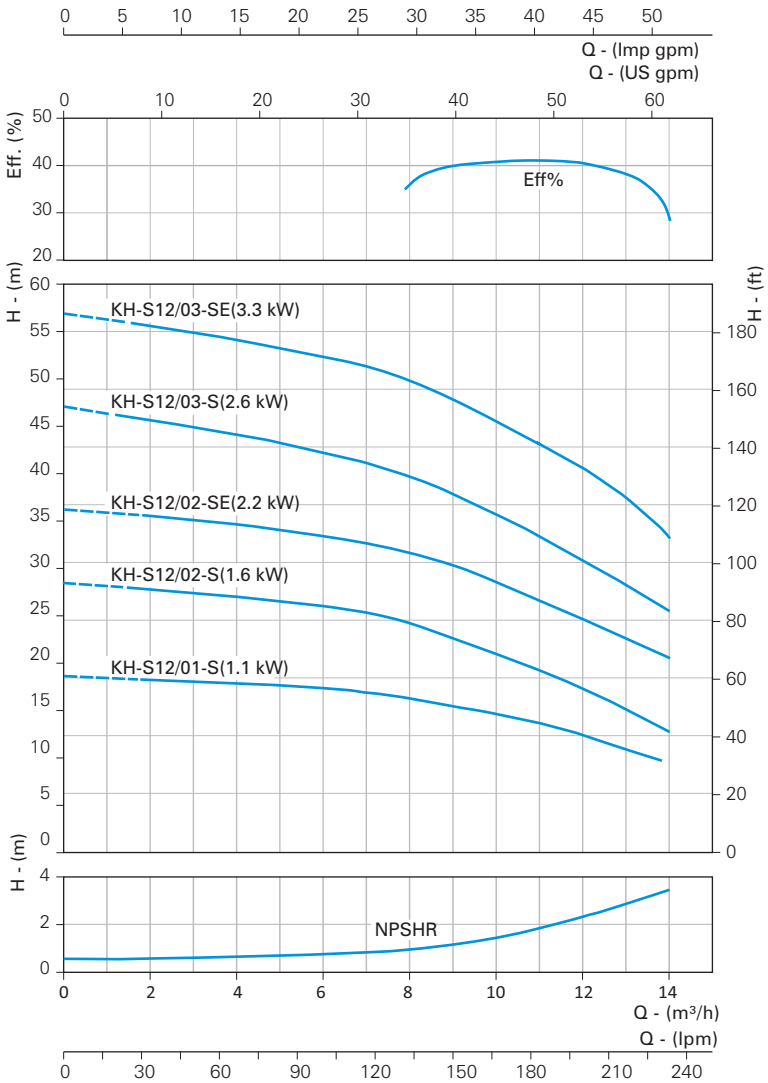

* E denotes elevated head model.

The final digit of the model identification "S" denotes 1 Phase & which will be replaced with "T" in case of 3 Phase D.O.L Motors.
The Given details / drawings / specifications are subject to change without prior notice.

DIMENSIONAL DRAWING & DATA

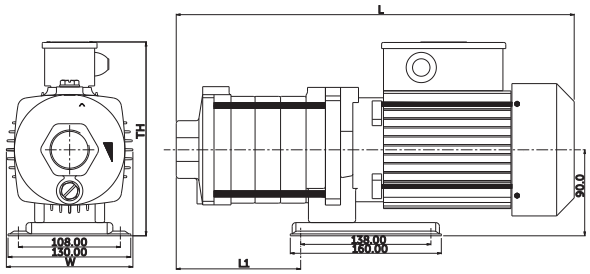

Model	Input Power kW	L*	L1*	W*	TH*	Weight (kg)
KH-S2.5/02-S	0.40	320	73	134	212	12.25
KH-S2.5/03-S	0.46	344	92	134	212	13.25
KH-S2.5/04-S	0.60	383	110	134	212	14.25
KH-S2.5/05-S	0.75	407	130	134	212	15.25
KH-S2.5/06-S	0.92	426	150	134	212	16.25
KH-S5/02-S	0.53	333	81	134	212	12.75
KH-S5/03-S	0.75	380	108	134	212	14.25
KH-S5/04-S	0.92	422	135	134	215	15.75
KH-S5/05-S	1.20	500	162	134	215	18.50
KH-S5/06-S	1.36	521	190	134	215	20.25

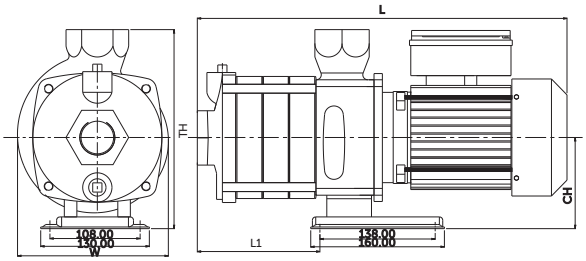

Model	Input Power kW	L*	L1*	W*	TH*	Weight (kg)
KH-S8/01-S	0.75	342	50	181	238	16.0
KH-S8/02-S	1.30	404	82	181	238	20.0
KH-S8/02-SE	1.50	404	82	181	238	20.5
KH-S8/03-S	1.80	473	114	181	238	25.0
KH-S8/03-SE	2.20	467	114	181	238	28.5
KH-S12/01-S	1.10	352	50	181	238	18.0
KH-S12/02-S	1.60	419	82	181	238	20.5
KH-S12/02-SE	2.20	435	82	181	238	28.5
KH-S12/03-S	2.60	482	114	181	238	30.5
KH-S12/03-SE	3.30	502	114	181	238	34.0

The final digit of the model identification “S” denotes 1 Phase & which will be replaced with “T” in case of 3 Phase D.O.L Motors.

VERTICAL MULTISTAGE CENTRIFUGAL PUMPS

DESCRIPTION

Genvik Vertical Multistage Centrifugal Pumps are specially designed to facilitate pressure boosting and are best suited for wide range of applications. The components of this pump such as impellers, diffusers and shaft are made of high quality stainless steel to prevent corrosion and ensures smooth operation for safe and hygienic drinking water systems. This pump with single phase motors are built with thermal overload protection. To prevent leakage and ensures less friction high quality mechanical seals are used.

MODEL IDENTIFICATION

K I V-★ ★/★ ★ - ★

Phase / Connection / Frequency
S - Single Phase (PSC) / 50Hz
T - Three Phase (DOL) / 50Hz
D - Three Phase (SD) / 50Hz

Type of Port Connections
L - with DIN Standard oval flange
R - with DIN Standard round flange
P - suitable for PJE coupling

No of impellers
02,03,04,05,06,07,08,09,...

Nominal Flow range in m³/h
(2.5 = 2.5, 5 = 5, 7.5 = 7.5,
50 = 50, 100 = 100, 125 = 125)

Types of Material of Constructions
Pump Casing / Pump Base / Pump Bracket / Impeller
C - SS 304 / Cast Iron / Cast Iron / SS 304
S - SS 304 / SS 304 / Cast Steel 304 / SS 304
N - SS 316 / SS 304 / Cast Steel 316 / SS 316
Note : Motor Frame upto 3.7kW-Al & Above 4.0 kW CI

Vertical Multistage Centrifugal Pump

Inline Pump

Genvik

FEATURES	APPLICATIONS
Balanced and rigid construction	Pressure Boosting
High mechanical stability	HVAC System
Corrosive resistant SS parts	High-rise Apartments
Inbuilt thermal overload protector in all single phase pumps	Water Treatment Plans
	Agriculture & Irrigation
Ensures long lasting performance	Car Service Station
Optimal design	

The Given details / drawings / specifications are subject to change without prior notice.

PUMPED LIQUIDS

Non-aggressive, non explosive, pure, cold, fresh water without abrasive particles having the following characteristics.

pH	6.5 to 8.5
Turbidity	50 ppm silica scale (max.)
Viscosity	1.75×10^6 m^2/sec (max.)
Hardness (Drinking Water)	300 (max.)
Specific gravity	1.004 (max.)
Allowable solids	3000 ppm (max.)
Chlorine ion density	500 ppm (max.)

PERFORMANCE CURVES CONDITIONS

- The performance curves show pump performance of the pump at rated speed and voltage. (2900 rpm)
- The measurements were made with airless water at 20°C. For pumping liquids with a density higher than that of water, motors with correspondingly higher outputs must be used.
- Pipe friction losses have not been included in the performance curves and performance data.
- The bold curves indicate the recommended performance range.
- Efficiency curve : ("EFF%") shows pump stage efficiency.
- Curve tolerance according to ISO : 9906, Grade 3B.
- The performance are at rated voltage and only indicative. Actual discharge depends on availability of water in well, based on strength of water source & height of water column.
- The given performance are for a specific materials of construction of pumps.

PUMPS

Inlet & Outlet size	1" x 1", 1¼" x 1¼", 1½" x 1½" , 2" x 2", 2½" x 2½" 3" x 3" & 4" x 4"
Suction Lift up to	7 m
Flow range upto	280 m^3/h
Max. head up to	320 m
Max. allowable liquid temperature	-20°C to + 120°C
Max. working pressure	32 bar
Sealing type	Mechanical Seal (Cartridge Type)

MOTORS

Power range	0.37 to 110 kW 1 Ph 230V, 3 Ph 380/415V
Speed	2900 rpm
Protection	IP 55 (IP 44 / 54 available on request)
Insulation Class	'B / F'
Number of starts per hour	Upto 4 kW - 100 times Above 4 kW - 20 times
Duty	S1 continuous
Rotation Sequence	Clockwise viewed from driving end
Ambient Temperature	40°C

MATERIALS OF CONSTRUCTION

Part Name	Type C	Type S	Type N
Pump Bracket	C.I (Cast Iron)	C.I (Cast Iron)	C.I (Cast Iron)
Impeller	AISI 304	AISI 304 (Stainless Steel)	AISI 316 (Stainless Steel)
Diffuser	AISI 304 (Stainless Steel)	AISI 304 (Stainless Steel)	AISI 316 (Stainless Steel)
Shaft	AISI 304 (Stainless Steel)	AISI 304 (Stainless Steel)	AISI 316 (Stainless Steel)
Mechanical Seal	SiC* / FKM	SiC* / FKM	SiC* / FKM
Distance Sleeve	AISI 304 (Stainless Steel)	AISI 304 (Stainless Steel)	AISI 316 (Stainless Steel)
Pump Base	C.I (Cast Iron)	AISI 304 (Stainless Steel)	AISI 316 (Stainless Steel)
Base Plate	C.I (Cast Iron)	C.I (Cast Iron)	C.I (Cast Iron)
Rubber Parts	Viton	Viton	Viton

* Options available

SiC - Silicon Carbide, FKM - Fluroelarmoer (Viton), TC - Tungsten Carbide

The Given details / drawings / specifications are subject to change without prior notice.

Group Performance Curve

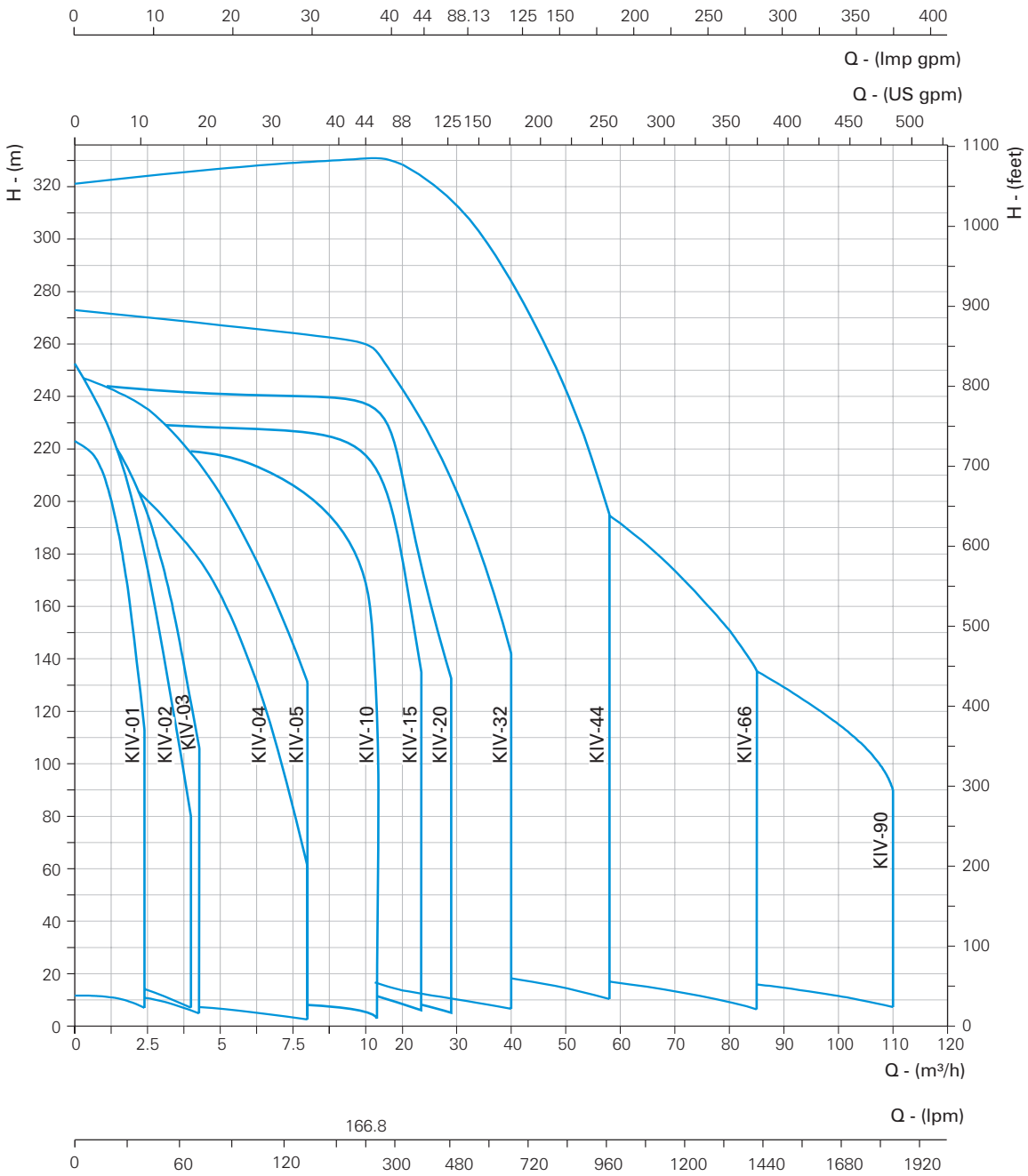

Cross Sectional Drawings

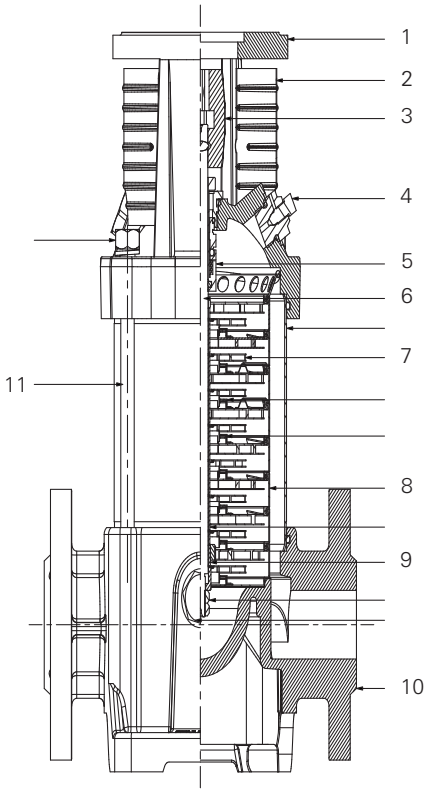

KIV CR Version (1-5m³/h)

Sl. No.	Components
1	Pump Head
2	Coupling Guard
3	Split Coupling
4	Plug
5	Mechanical Seal
6	Shaft
7	Impeller
8	chamber
9	Bearing Ring
10	Pump Base
11	Tie Rod

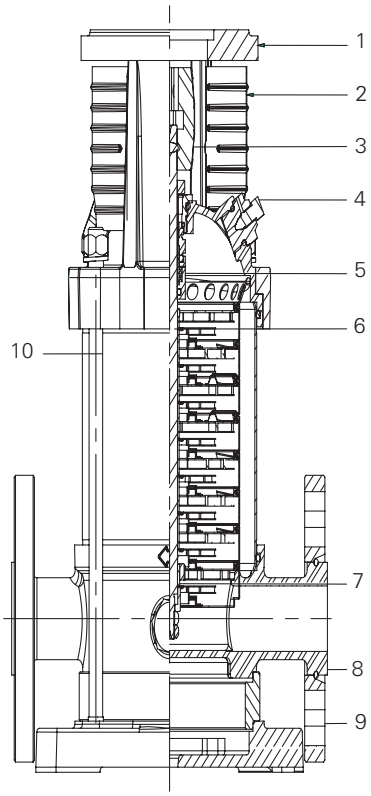

KIV S & NR Version

Sl. No.	Components
1	Pump Head
2	Coupling Guard
3	Split Coupling
4	Plug
5	Mechanical Seal
6	Shaft
7	Impeller
8	Pump Base
9	Flange
10	Tie Rod

The Given details / drawings / specifications are subject to change without prior notice.

Cross Sectional Drawings

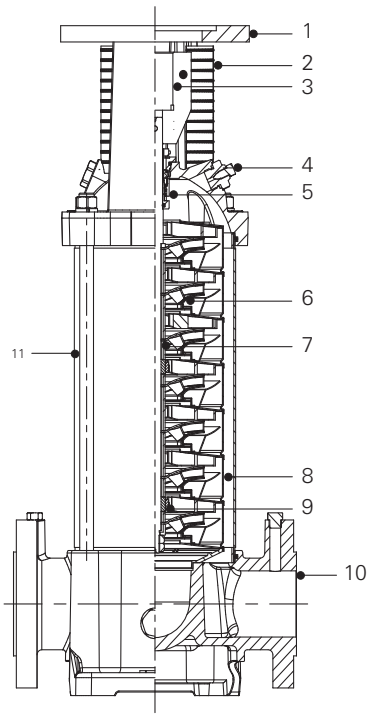

KIV CR Version (10-20m³/h)

Sl. No.	Components
1	Pump Head
2	Coupling Guard
3	Split Coupling
4	Plug
5	Mechanical Seal
6	Impeller
7	Shaft
8	Chamber
9	Bearing Ring
10	Pump Base
11	Tie Rod

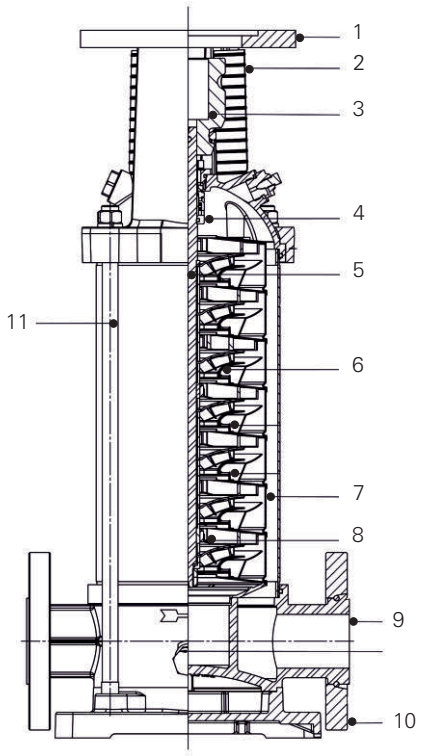

KIV - S & NR Version (10-20m³/h)

Sl. No.	Components
1	Pump Head
2	Coupling Guard
3	Coupling
4	Mechanical Seal
5	Shaft
6	Impeller
7	Chamber
8	Bearing Ring
9	Pump Base
10	Flange
11	Tie Rod

Cross Sectional Drawings

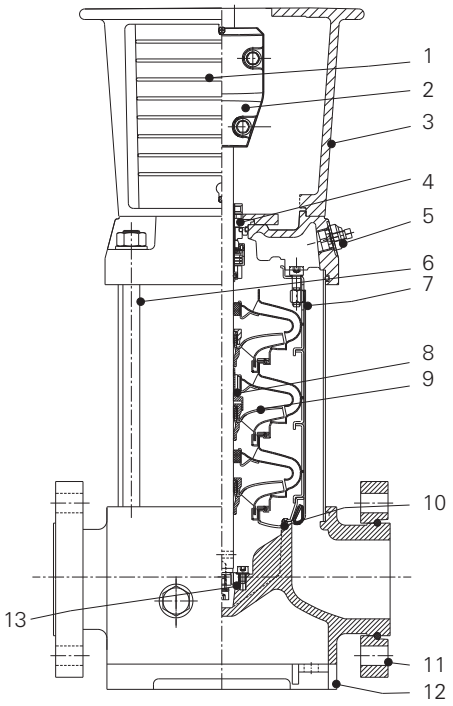

KIV - CR Version (32, 44, 66 & 90m³/h)

Sl. No.	Components
1	Coupling Guard
2	Coupling
3	Top Bracket Stool
4	Mechanical Seal
5	Top Bracket Plug
6	Tie Rod
7	Locking Strap
8	Bearing Ring
9	Impeller
10	Bottom Bracket casing
11	Din Flange
12	Bottom Bracket
13	Bottom Bracket Bush

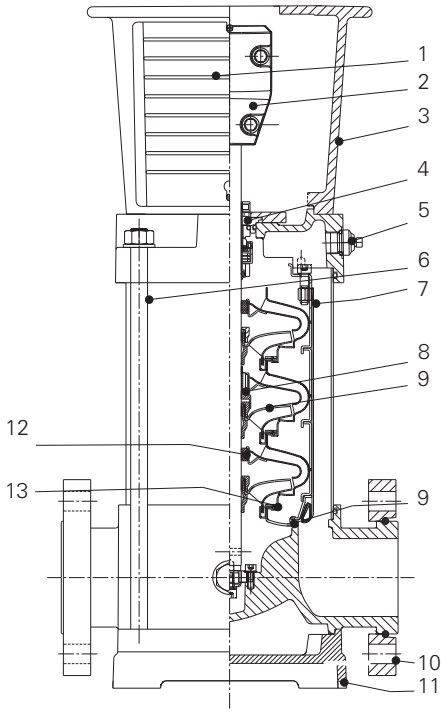

KIV - S & NR Version (32, 44, 66, & 90m³/h)

Sl. No.	Components
1	Coupling Guard
2	Coupling
3	Top Bracket Stool
4	Mechanical Seal
5	Top Bracket Plug
6	Tie Rod
7	Locking Strap
8	Bearing Ring
9	Impeller
10	Bottom Bracket casing
11	Din Flange
12	Base Plate with bolt
13	Casing Bush
14	Wearing Ring

The Given details / drawings / specifications are subject to change without prior notice.

Nominal Flow	1 m³/h
Model	KIV-1
Pipe Size	1"x1" / 1¼"x1¼"

PERFORMANCE DATA

Model	Power		lpm	8.5	16.2	24.6	33.3	40
	kW	HP	m³/h	0.5	1	1.5	2	2.4
KIV-C1/02R-T	0.37	0.5	TOTAL DYNAMIC HEAD IN METRES	12	11	10	9	7
KIV-C1/03R-T	0.37	0.5		18	17.5	16.5	13.5	10
KIV-C1/04R-T	0.37	0.5		24.5	24	22	18	13
KIV-C1/05R-T	0.37	0.5		30	29.2	26.5	22	16
KIV-C1/06R-T	0.37	0.5		36	34	31	24	18
KIV-C1/07R-T	0.37	0.5		42	39	35	26	19
KIV-C1/08R-T	0.55	0.75		48	46	42	33	24
KIV-C1/09R-T	0.55	0.75		55	52	47	37	26
KIV-C1/10R-T	0.55	0.75		60	57	52	41	29
KIV-C1/11R-T	0.55	0.75		67	63	57	45	32
KIV-C1/12R-T	0.75	1.0		75	70	63	50	36
KIV-C1/13R-T	0.75	1.0		79	75	67	54	40
KIV-C1/15R-T	0.75	1.0		90	85	78	63	46
KIV-C1/17R-T	1.1	1.5		105	100	90	72	52
KIV-C1/19R-T	1.1	1.5		114	110	98	78	56
KIV-C1/21R-T	1.1	1.5		125	120	108	85	60
KIV-C1/23R-T	1.1	1.5		136	130	116	91	64
KIV-C1/25R-T	1.5	2		150	142	128	107	76
KIV-C1/27R-T	1.5	2		165	158	142	114	80
KIV-C1/30R-T	1.5	2		182	174	154	122	90
KIV-C1/33R-T	2.2	3		203	196	176	142	104
KIV-C1/36R-T	2.2	3		219	210	188	150	114

The final digit of the model identification “T” denotes 3 Phase D.O.L motors and which will be replaced with “S” in case of 1 Phase motor.
For Star Delta Connection replace "T" with "D"
Note : 1 Phase motors are only upto 4HP

Nominal Flow	1 m³/h
Model	KIV-1
Pipe Size	1"x1" / 1¼"x1¼"

PERFORMANCE CURVE

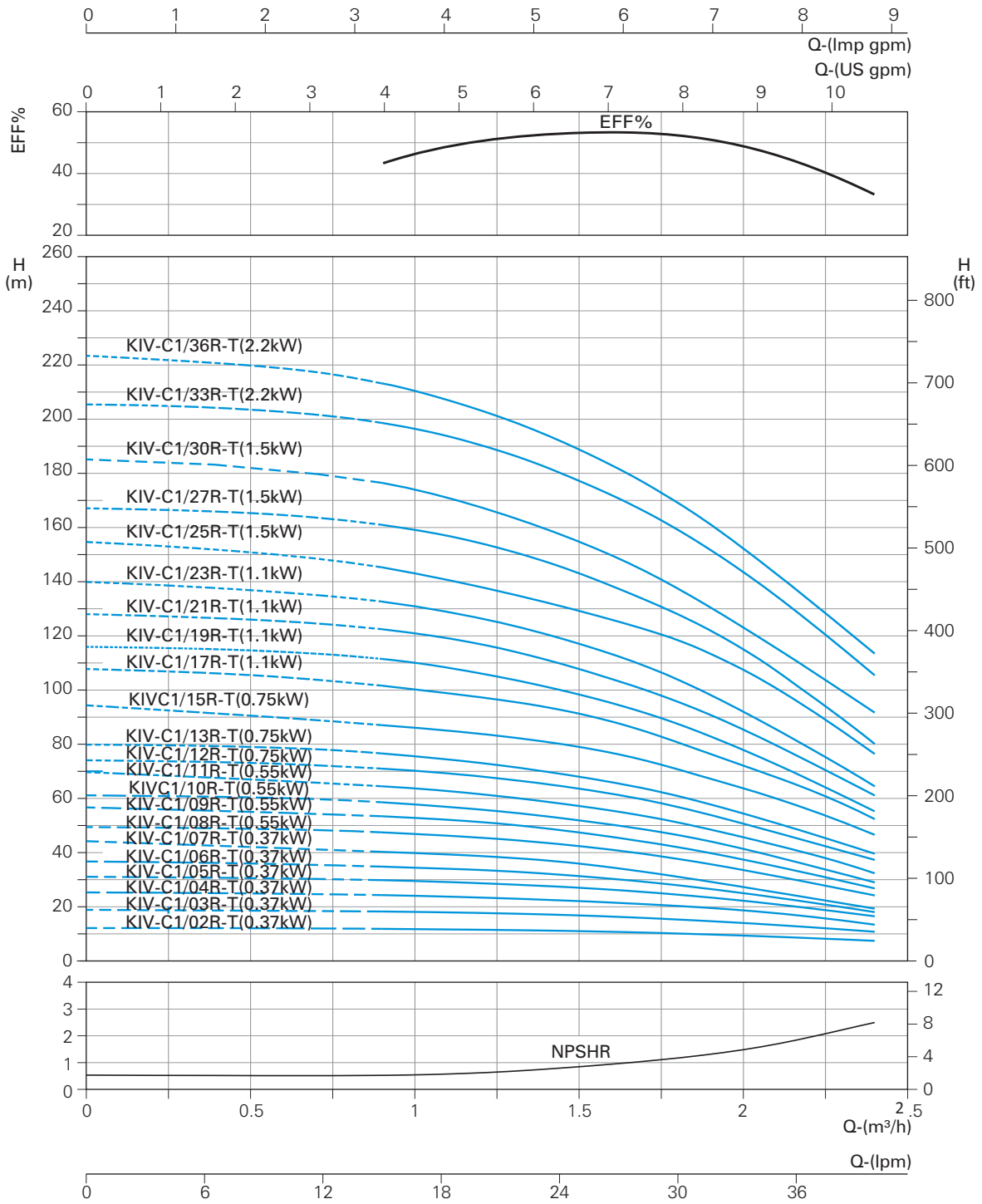

The Given details / drawings / specifications are subject to change without prior notice.

Nominal Flow	2 m³/h
Model	KIV-2
Pipe Size	1"x1" / 1¼"x1¼"

PERFORMANCE DATA

Model	Power		lpm	16.2	24.6	33.3	41.6	50	58.3	66.6
	kW	HP	m³/h	1	1.5	2	2.5	3	3.5	4
KIV-C2/02R-T	0.37	0.50	TOTAL DYNAMIC HEAD IN METRES	18	17	15	13.5	12.5	10	7
KIV-C2/03R-T	0.37	0.50		26	25	24	22.5	20	17.5	15
KIV-C2/04R-T	0.55	0.75		35.5	34	32.5	30	27.5	24.5	20
KIV-C2/05R-T	0.55	0.75		44.5	42	40	36.5	33.5	30	25
KIV-C2/06R-T	0.75	1.0		52.5	50	47.5	44.5	41	36.5	30
KIV-C2/07R-T	0.75	1.0		62	58.5	55	52	47	41.5	35
KIV-C2/09R-T	1.1	1.5		80	76.5	70	62	52.5	45	37
KIV-C2/11R-T	1.1	1.5		95.5	90	83	73.5	62.5	50	37.5
KIV-C2/13R-T	1.5	2.0		117	109	100	87.5	72.5	57.5	42
KIV-C2/15R-T	1.5	2.0		130	122.5	112.5	100	85	67.5	47.5
KIV-C2/18R-T	2.2	3.0		163	153.5	141	126	108	88	63
KIV-C2/22R-T	2.2	3.0		191	180	165	150	127.5	100	70
KIV-C2/26R-T	3.0	4.0		230	215.5	200	175	145	102.5	80

The final digit of the model identification “T” denotes 3 Phase D.O.L motors and which will be replaced with “S” in case of 1 Phase motor.
For Star Delta Connection replace "T" with "D"
Note : 1 Phase motors are only upto 4HP

Nominal Flow	2 m³/h
Model	KIV-2
Pipe Size	1"x1" / 1¼"x1¼"

PERFORMANCE CURVE

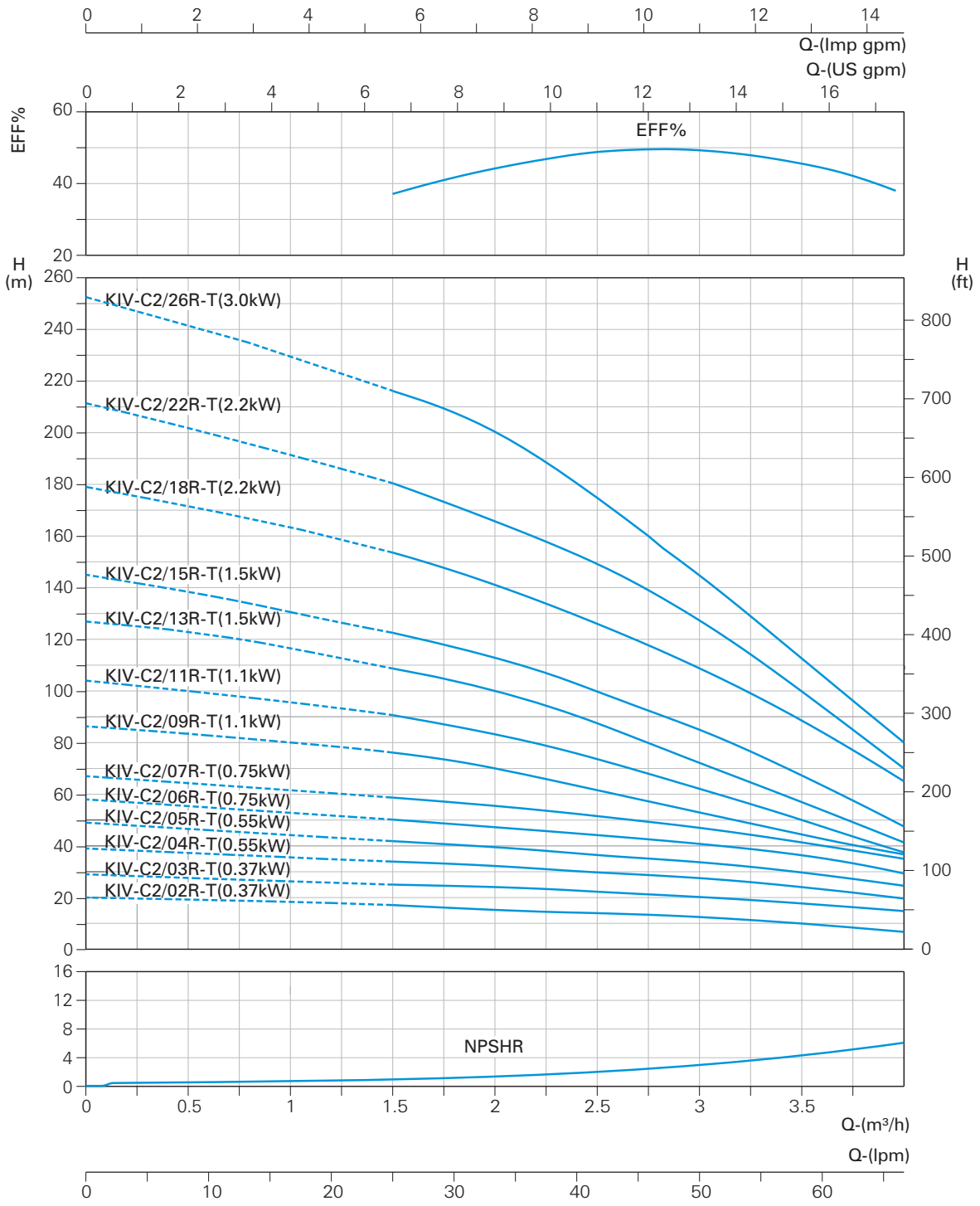

The Given details / drawings / specifications are subject to change without prior notice.

Nominal Flow	3 m³/h
Model	KIV-3
Pipe Size	1"x1" / 1¼"x1¼"

PERFORMANCE DATA

Model	Power		lpm	16.2	33.3	50	66.6	71.4
	kW	HP	m³/h	1	2	3	4	4.25
KIV-C3/02R-T	0.37	0.5	TOTAL DYNAMIC HEAD IN METRES	13	11.5	9.5	6	5
KIV-C3/03R-T	0.37	0.5		18	17.5	14.5	9.5	8
KIV-C3/04R-T	0.37	0.5		25	23	18	12	10.5
KIV-C3/05R-T	0.37	0.5		31.5	29	23.5	15	12.5
KIV-C3/06R-T	0.55	0.75		37.5	34.5	29	18.5	16
KIV-C3/07R-T	0.55	0.75		44	40	33	24.5	19.5
KIV-C3/08R-T	0.75	1.0		51	46.5	38.5	26	23
KIV-C3/09R-T	0.75	1.0		57	51.5	43	28.5	25
KIV-C3/10R-T	0.75	1.0		63.5	58	47	31	27
KIV-C3/11R-T	1.1	1.5		69.5	63.5	53	36	31
KIV-C3/12R-T	1.1	1.5		75.5	69	57	38	33
KIV-C3/13R-T	1.1	1.5		81.5	74	61.5	41	35.5
KIV-C3/15R-T	1.1	1.5		93	87	74	47	42
KIV-C3/17R-T	1.5	2.0		108.5	99	82.5	57	51.5
KIV-C3/19R-T	1.5	2.0		121	110.5	92	63	54.5
KIV-C3/21R-T	2.2	3.0		135	123.5	104	72	63
KIV-C3/23R-T	2.2	3.0		147	135	113	79	69
KIV-C3/25R-T	2.2	3.0		155	147	122	85.5	73
KIV-C3/27R-T	2.2	3.0		172	157.5	137.5	90.5	78.5
KIV-C3/29R-T	2.2	3.0		184.5	168.5	140.5	98	84
KIV-C3/31R-T	3.0	4.0		199	182.5	155	106.5	92.5
KIV-C3/33R-T	3.0	4.0		212.5	194.5	163	114	99.5
KIV-C3/36R-T	3.0	4.0		227	208.5	177.5	121	106.5

The final digit of the model identification “T” denotes 3 Phase D.O.L motors and which will be replaced with “S” in case of 1 Phase motor.
For Star Delta Connection replace "T" with "D"
Note : 1 Phase motors are only upto 4HP

Nominal Flow	3 m³/h
Model	KIV-3
Pipe Size	1"x1" / 1¼"x1¼"

PERFORMANCE CURVE

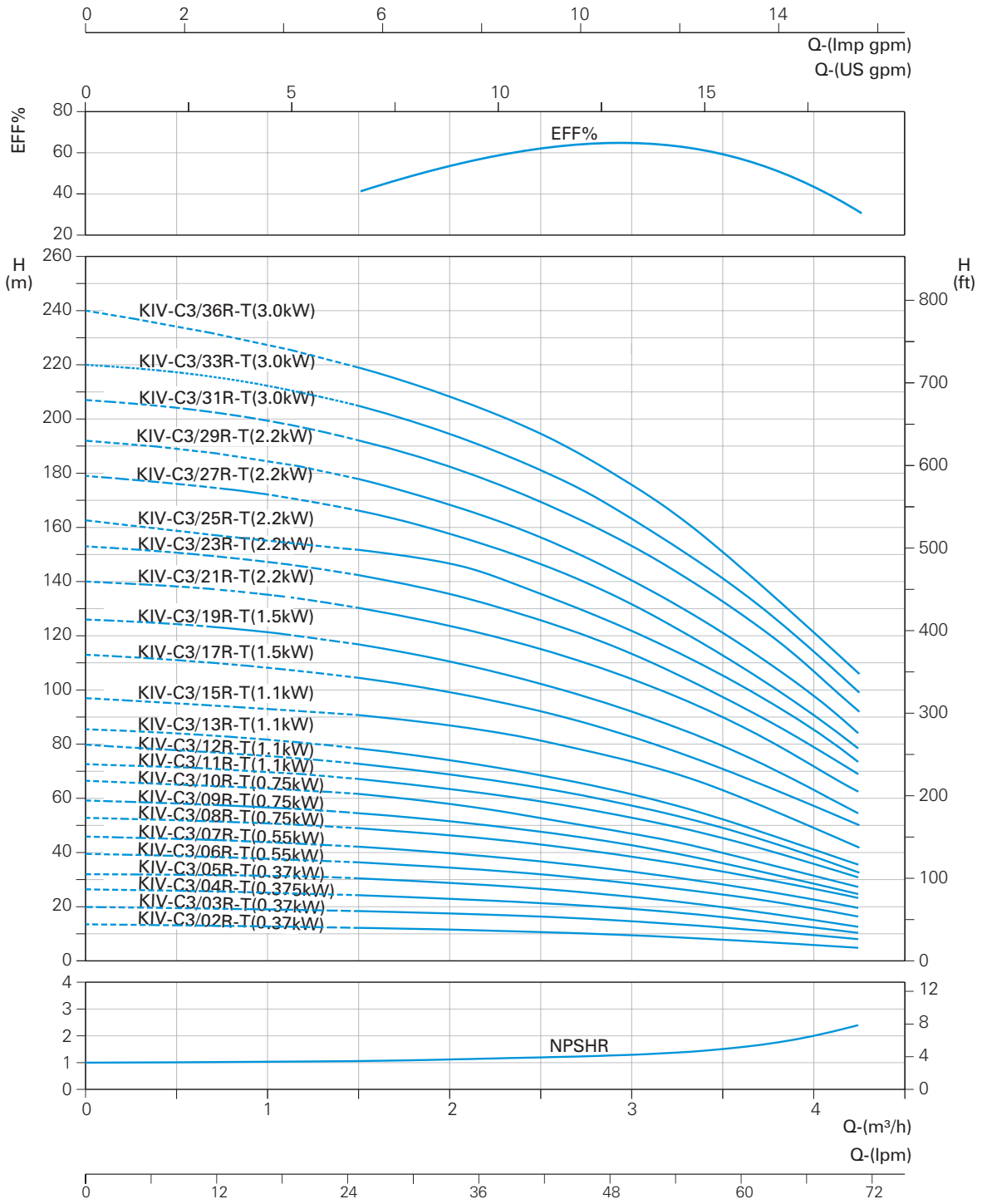

The Given details / drawings / specifications are subject to change without prior notice.

Nominal Flow	4 m³/h
Model	KIV-4
Pipe Size	1"x1" / 1¼"x1¼"

PERFORMANCE DATA

Model	Power		lpm	33.3	50	66.6	83.3	100	116.6	133.3
	kW	HP	m³/h	2	3	4	5	6	7	8
KIV-C4/01R-T	0.37	0.50	TOTAL DYNAMIC HEAD IN METRES	9	8	7.5	7	5.5	4.5	2.5
KIV-C4/02R-T	0.37	0.50		18.5	17.5	17	14.5	12	8	4
KIV-C4/03R-T	0.55	0.75		27.5	25.5	24.5	22	17.5	12.5	7
KIV-C4/04R-T	0.75	1.0		37.5	35	32.5	30	25	17.5	9
KIV-C4/05R-T	1.1	1.5		45	42.5	40	37	32	22.5	10
KIV-C4/06R-T	1.1	1.5		56	53	50	47	40.5	28.5	14
KIV-C4/07R-T	1.5	2.0		63	60	56	50.5	44	32.5	15
KIV-C4/08R-T	1.5	2.0		77.5	75	71.5	65.5	59	45	30
KIV-C4/10R-T	2.2	3.0		92	87.5	82.5	77	65	52.5	37.5
KIV-C4/12R-T	2.2	3.0		110	105	99.5	90	77	61	44.5
KIV-C4/14R-T	3	4.0		127.5	122	115	106	92	72.5	52.5
KIV-C4/16R-T	3	4.0		147	140	132.5	122	104	80	55
KIV-C4/19R-T	4	5.5		180	170	157.5	141	117.5	87.5	57.5
KIV-C4/22R-T	4	5.5		206	195	182	165	139	105	61

The final digit of the model identification “T” denotes 3 Phase D.O.L motors and which will be replaced with “S” in case of 1 Phase motor.
For Star Delta Connection replace "T" with "D"
Note : 1 Phase motors are only upto 4HP

Nominal Flow	4 m³/h
Model	KIV-4
Pipe Size	1"x1" / 1¼"x1¼"

PERFORMANCE CURVE

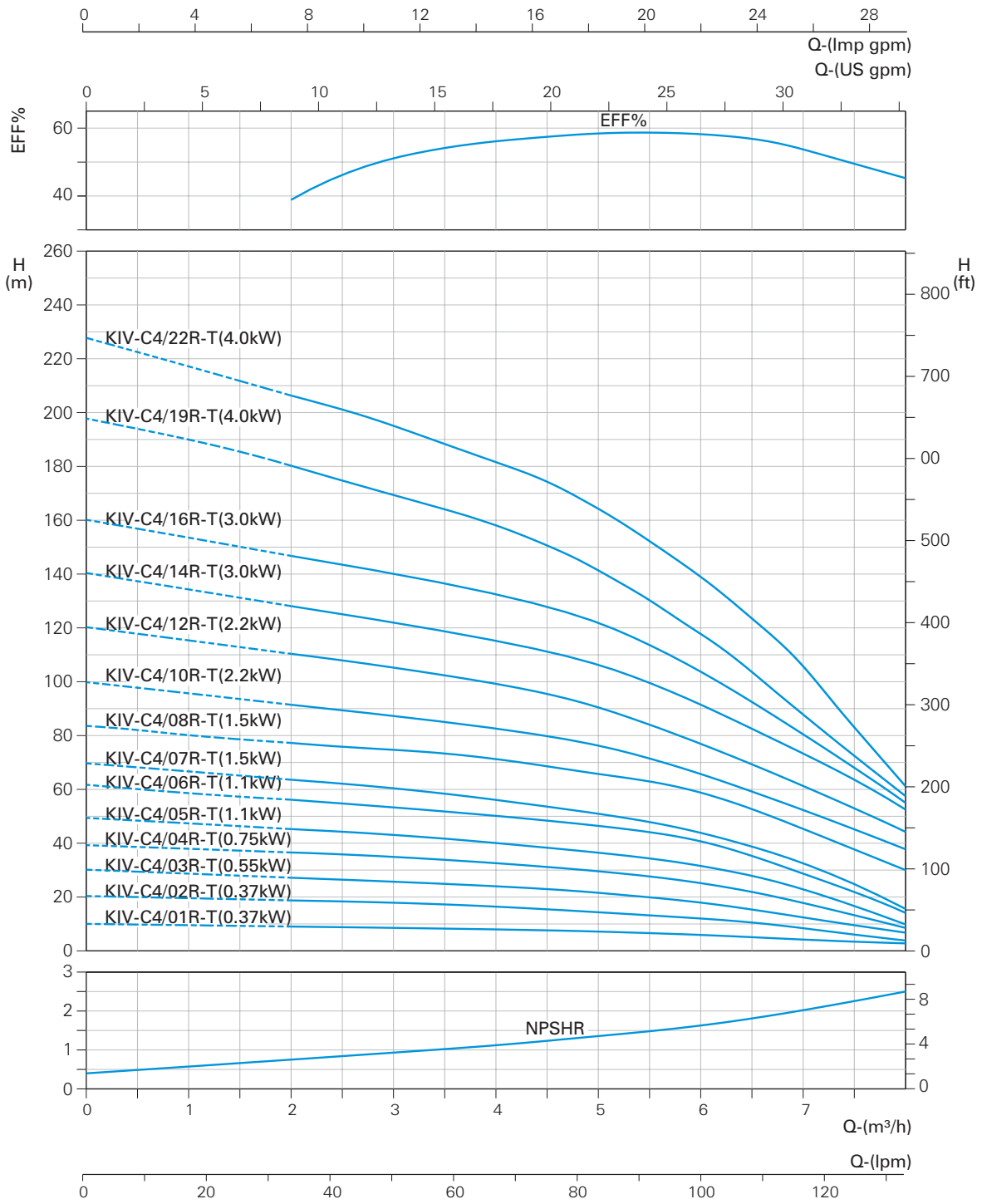

The Given details / drawings / specifications are subject to change without prior notice.

Nominal Flow	5 m³/h
Model	KIV-5
Pipe Size	1"x1" / 1¼"x1¼"

PERFORMANCE DATA

Model	Power		lpm	33.3	66.6	100	116.6	133.3
	kW	HP	m³/h	2	4	6	7	8
KIV-C5/02R-T	0.37	0.5	TOTAL DYNAMIC HEAD IN METRES	13.5	11.5	8	6	4
KIV-C5/03R-T	0.55	0.75		19	16	12.5	10	6.5
KIV-C5/04R-T	0.55	0.75		26	22	16	12.5	9
KIV-C5/05R-T	0.75	1.0		34	30	23	19.5	16
KIV-C5/06R-T	1.1	1.5		38	34	27	22	17.5
KIV-C5/07R-T	1.1	1.5		45	40	31	26	19.5
KIV-C5/08R-T	1.1	1.5		51	45	35	29	22
KIV-C5/09R-T	1.5	2.0		59	53.5	43	36	29.5
KIV-C5/10R-T	1.5	2.0		64	58	47	39.5	32
KIV-C5/11R-T	2.2	3.0		73	66	53.5	45	36
KIV-C5/12R-T	2.2	3.0		79	72	59	50	40
KIV-C5/13R-T	2.2	3.0		87	79	64	54	44
KIV-C5/14R-T	2.2	3.0		89	82	69	60	49
KIV-C5/15R-T	2.2	3.0		99.5	90	74	63	52
KIV-C5/16R-T	2.2	3.0		105	95	78	66.5	54
KIV-C5/18R-T	3.0	4.0		118	109	90	79	65
KIV-C5/20R-T	3.0	4.0		132	120	100	86	70
KIV-C5/22R-T	4.0	5.5		147	134	112	96	78
KIV-C5/24R-T	4.0	5.5		158	145	121	104	83
KIV-C5/26R-T	4.0	5.5		173	158	131.5	114	93
KIV-C5/29R-T	4.0	5.5		192	175	145	125	102
KIV-C5/32R-T	5.5	7.5		214	196	164	143	116
KIV-C5/36R-T	5.5	7.5		238	218	183	159	131

The final digit of the model identification “T” denotes 3 Phase D.O.L motors and which will be replaced with “S” in case of 1 Phase motor.
For Star Delta Connection replace "T" with "D"
Note : 1 Phase motors are only upto 4HP

Nominal Flow	5 m³/h
Model	KIV-5
Pipe Size	1"x1" / 1¼"x1¼"

PERFORMANCE CURVE

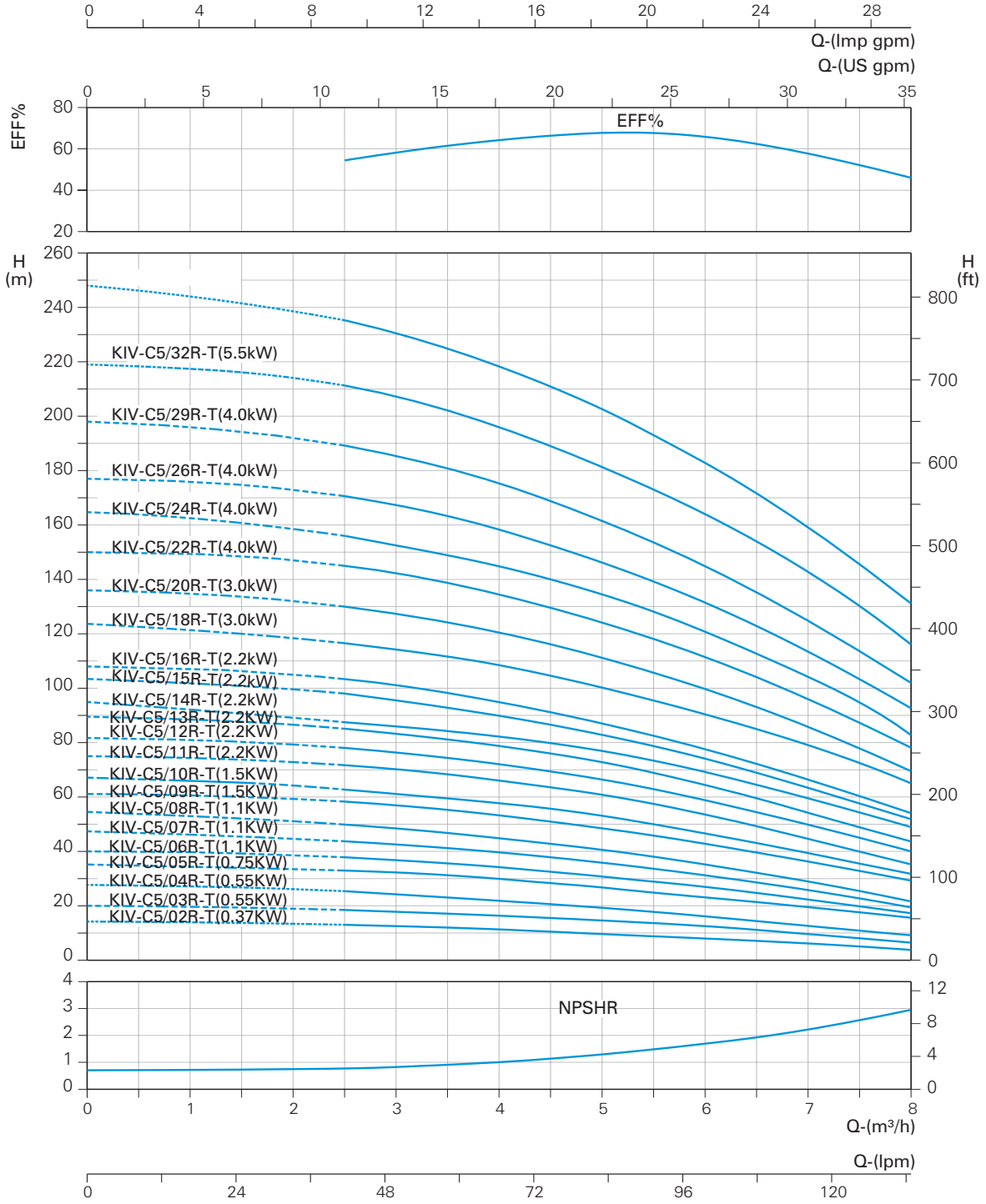

The Given details / drawings / specifications are subject to change without prior notice.

Nominal Flow	10 m³/h
Model	KIV-10
Pipe Size	1½"x1½"

PERFORMANCE DATA

Model	Power		lpm	33.6	66.6	100.2	133.2	166.8	200	216.6
	kW	HP	m³/h	2	4	6	8	10	12	13
KIV-C10/01R-T	0.37	0.50	TOTAL DYNAMIC HEAD IN METRES	9.8	9	8.5	8	7	5	4.2
KIV-C10/02R-T	0.75	1.0		19.2	19.2	18.5	17	14.2	11.5	9.8
KIV-C10/03R-T	1.1	1.5		29	28.5	28	26	23	19	17
KIV-C10/04R-T	1.5	2.0		39.8	39.5	38	36	31	25.5	22
KIV-C10/05R-T	2.2	3.0		50	50	48.5	45	40	32.5	28
KIV-C10/06R-T	2.2	3.0		60	60	58.5	54	48	39	34.2
KIV-C10/07R-T	3.0	4.0		70.3	70	68	63.5	56	48	41
KIV-C10/08R-T	3.0	4.0		80	80.3	78.2	73	64	53	46.8
KIV-C10/09R-T	3.0	4.0		90	90	88	82	72	59.5	52
KIV-C10/10R-T	4.0	5.5		100.8	101	98.5	91.8	81.2	77.7	59
KIV-C10/12R-T	4.0	5.5		120.8	121.5	119.6	110.7	97.5	81	71.8
KIV-C10/14R-T	5.5	7.5		140.8	141	138.8	128.3	113.2	93.7	83
KIV-C10/16R-T	5.5	7.5		161	161	156.5	146	129	106.8	94
KIV-C10/18R-T	7.5	10		180	180	175.3	163.5	144	118.7	105
KIV-C10/20R-T	7.5	10		200	199.8	195.4	182	160.3	130.4	117
KIV-C10/22R-T	7.5	10		220	219.7	214.3	200	177.5	147.5	129.5

The final digit of the model identification “T” denotes 3 Phase D.O.L motors and which will be replaced with “S” in case of 1 Phase motor.
For Star Delta Connection replace "T" with "D"
Note : 1 Phase motors are only upto 4HP

Nominal Flow	10 m³/h
Model	KIV-10
Pipe Size	1½"x1½"

PERFORMANCE CURVE

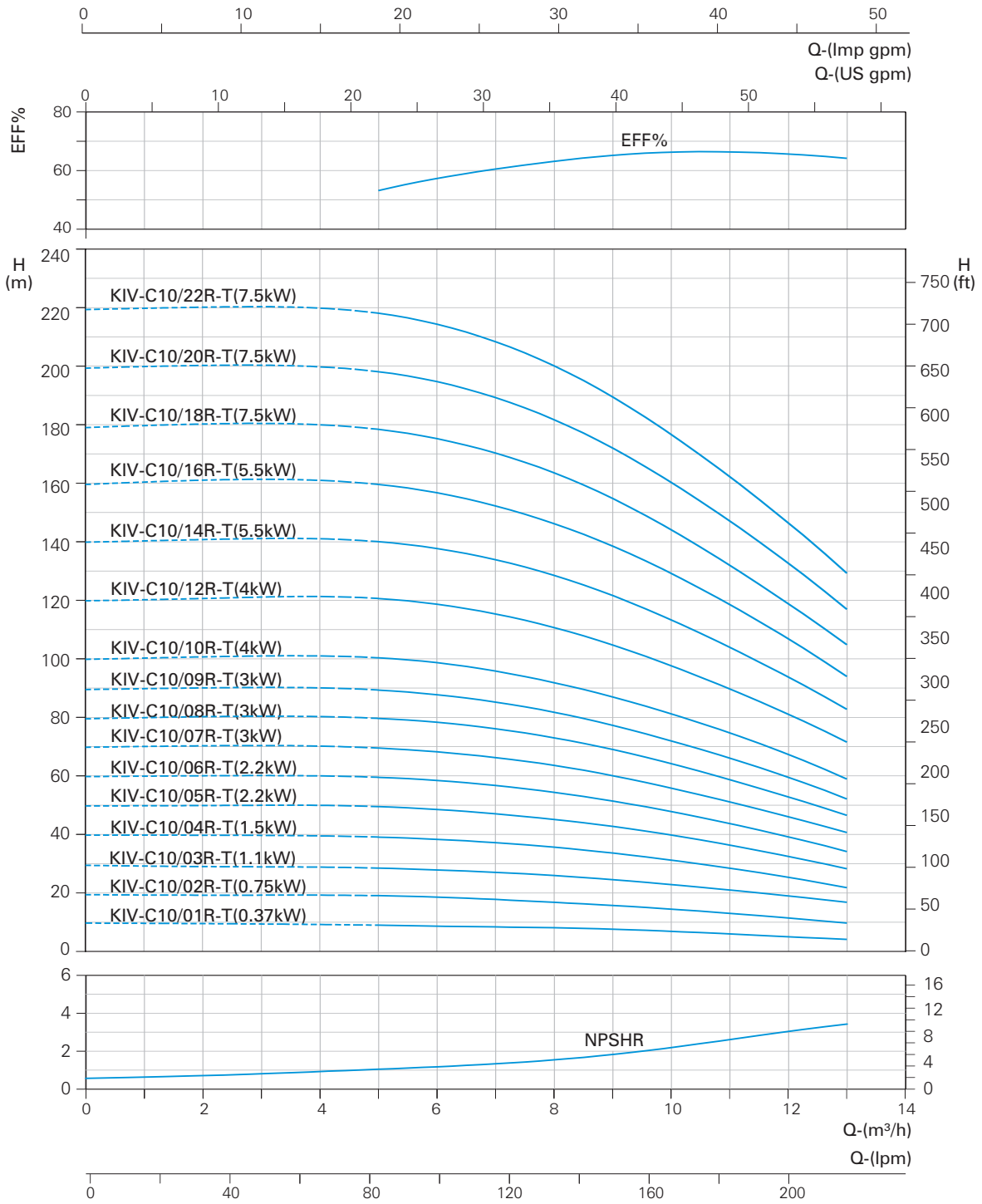

The Given details / drawings / specifications are subject to change without prior notice.

Nominal Flow	15 m³/h
Model	KIV-15
Pipe Size	2"x2"

PERFORMANCE DATA

Model	Power		lpm	66.6	133.2	200	267	333.6	391.8
	kW	HP	m³/h	4	8	12	16	20	23.5
KIV-C15/01R-T	1.1	1.5	TOTAL DYNAMIC HEAD IN METRES	12.5	12	11	10	7.5	6
KIV-C15/02R-T	2.2	3.0		27	26	24.5	22.5	18.5	15
KIV-C15/03R-T	3.0	4.0		40	39.5	37	33	28	22.5
KIV-C15/04R-T	4.0	5.5		53	52.5	50	45	38.5	31
KIV-C15/05R-T	4.0	5.5		67.5	66	62.5	57	48	39
KIV-C15/06R-T	5.5	7.5		81	79.5	75.5	68	58	47
KIV-C15/07R-T	5.5	7.5		94.5	92.5	87.5	79	67.5	56
KIV-C15/08R-T	7.5	10		107.5	105	100	90	77	62
KIV-C15/09R-T	7.5	10		121	118	112.5	102	87	71
KIV-C15/10R-T	11	15		136	132.5	127	115	98	81
KIV-C15/12R-T	11	15		162.5	159.5	152	138	117.5	96
KIV-C15/14R-T	11	15		190	186	177.5	160	137.5	112.5
KIV-C15/17R-T	15	20		230	225	215	194.5	165	135

The final digit of the model identification “T” denotes 3 Phase D.O.L motors and which will be replaced with “S” in case of 1 Phase motor.
For Star Delta Connection replace "T" with "D"
Note : 1 Phase motors are only upto 4HP

Nominal Flow	15 m³/h
Model	KIV-15
Pipe Size	2"x2"

PERFORMANCE CURVE

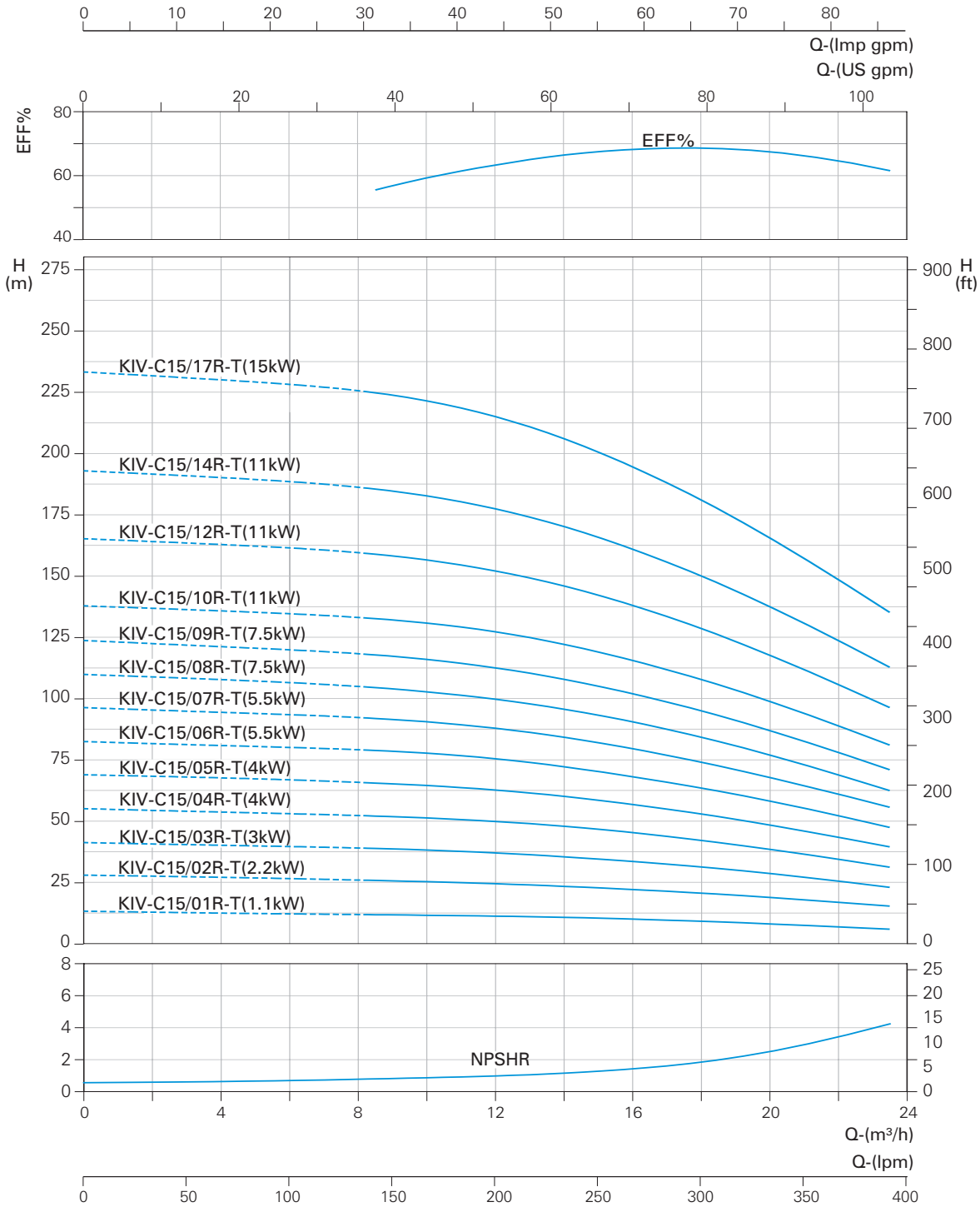

The Given details / drawings / specifications are subject to change without prior notice.

Nominal Flow	20 m³/h
Model	KIV-20
Pipe Size	2"x2"

PERFORMANCE DATA

Model	Power		lpm	83.4	166.2	250.2	333.6	417	483.6
	kW	HP	m³/h	5	10	15	20	25	29
KIV-C20/01R-T	1.1	1.5	TOTAL DYNAMIC HEAD IN METRES	13.7	13	12	10	7.5	5
KIV-C20/02R-T	2.2	3.0		28	26	25	22.5	17.5	13
KIV-C20/03R-T	4.0	5.5		42	41.5	38.7	34	28	22
KIV-C20/04R-T	5.5	7.5		56.2	55	52.5	47	38	29
KIV-C20/05R-T	5.5	7.5		70.5	69	65.5	58.8	47.5	37
KIV-C20/06R-T	7.5	10		85	83	76.2	67.5	57.5	44.5
KIV-C20/07R-T	7.5	10		98.5	97	92	82.5	67.5	52.5
KIV-C20/08R-T	11	15		113.7	112	106.7	96	78.5	62
KIV-C20/10R-T	11	15		142.5	140	133	120	98	66
KIV-C20/12R-T	15	20		171	168.8	160.5	145	119	94
KIV-C20/14R-T	15	20		200	197	187.5	169	137	110
KIV-C20/17R-T	18.5	25		242.5	238	226	204	168	132.5

The final digit of the model identification “T” denotes 3 Phase D.O.L motors and which will be replaced with “S” in case of 1 Phase motor.
For Star Delta Connection replace "T" with "D"
Note : 1 Phase motors are only upto 4HP

Nominal Flow	20 m³/h
Model	KIV-20
Pipe Size	2"x2"

PERFORMANCE CURVE

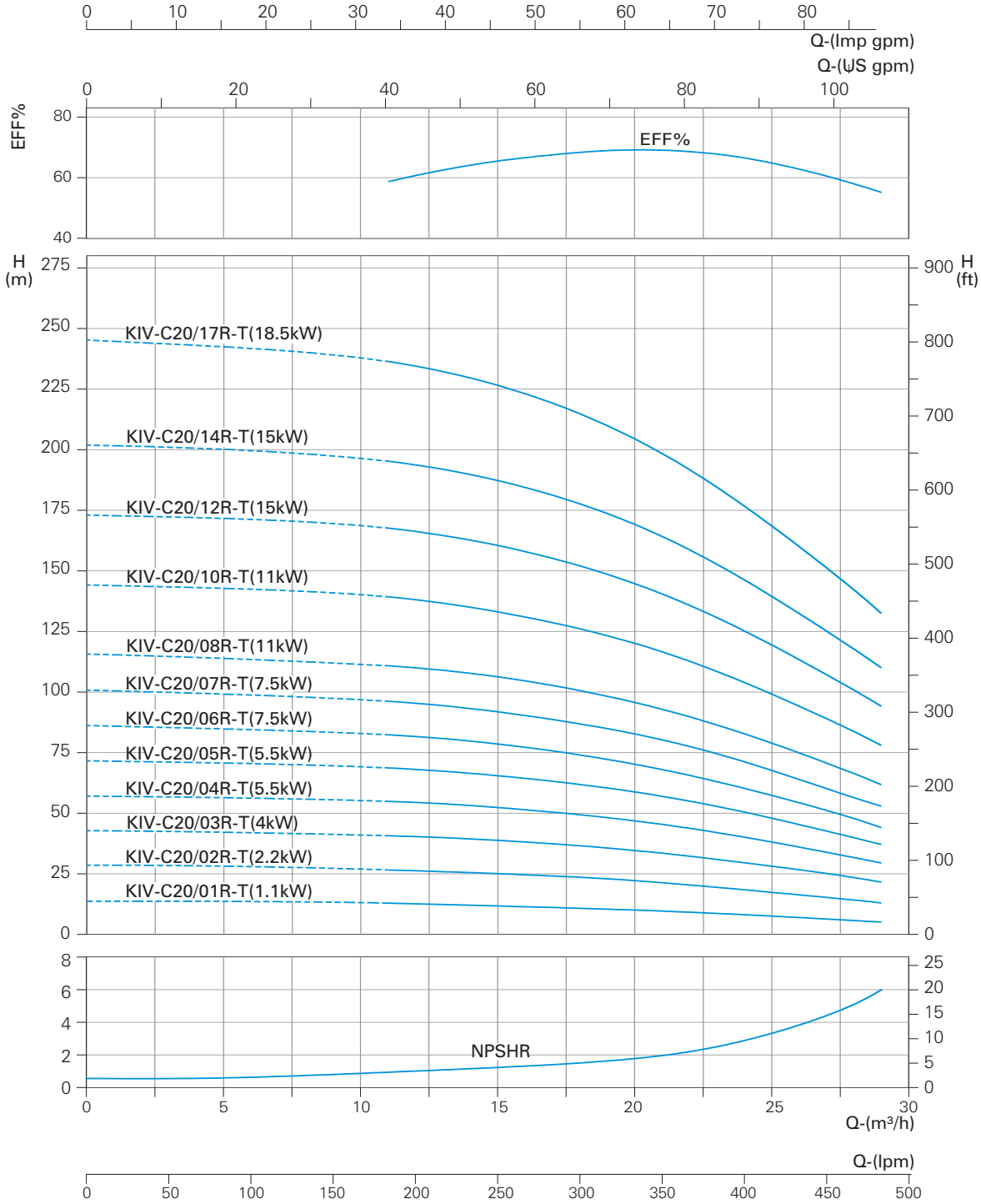

The Given details / drawings / specifications are subject to change without prior notice.

Nominal Flow	32 m³/h
Model	KIV-32
Pipe Size	2½"x2½"

PERFORMANCE DATA

Model	Power		lpm	166.8	250.2	333.6	471	500.4	583.8	700.2
	kW	HP	m³/h	10	15	20	25	30	35	42
KIV-C32/01AR-T	1.5	2	TOTAL DYNAMIC HEAD IN METRES	16.5	16	15	14	13	9	5
KIV-C32/01R-T	2.2	3		19	18	17	16	14	12	7
KIV-C32/02AAR-T	3	4		30.5	30	29	26	23	17	8
KIV-C32/02AR-T	4	5.5		34	33	32	29.5	26	21	13
KIV-C32/02R-T	4	5.5		38	37	35	33	29.5	25	17
KIV-C32/03AAR-T	5.5	7.5		50	48	46	42	36	28	18
KIV-C32/03R-T	5.5	7.5		57	55	53	49.5	45	38	26
KIV-C32/04AAR-T	7.5	10		68	67	64	59.5	52	43	26
KIV-C32/04R-T	7.5	10		76	74	69	64	56	47	34
KIV-C32/05AAR-T	11	15		87	84	81	75	66	55	36
KIV-C32/05R-T	11	15		97.5	94	89	83	74	64	44
KIV-C32/06AAR-T	11	15		105	103	98	93	82	68	48
KIV-C32/06R-T	11	15		114	111	105	98	88	76	55
KIV-C32/07AAR-T	15	20		126	123	116	107	95	81	57
KIV-C32/07R-T	15	20		134	130	123	115	104	89	65
KIV-C32/08AAR-T	15	20		146.5	143	136	126	113	95	67

* A / AA denote abridged version.

The final digit of the model identification “T” denotes 3 Phase D.O.L motors. For Star Delta Connection replace "T" with "D".

Nominal Flow	32 m³/h
Model	KIV-32
Pipe Size	2½"x2½"

PERFORMANCE CURVE

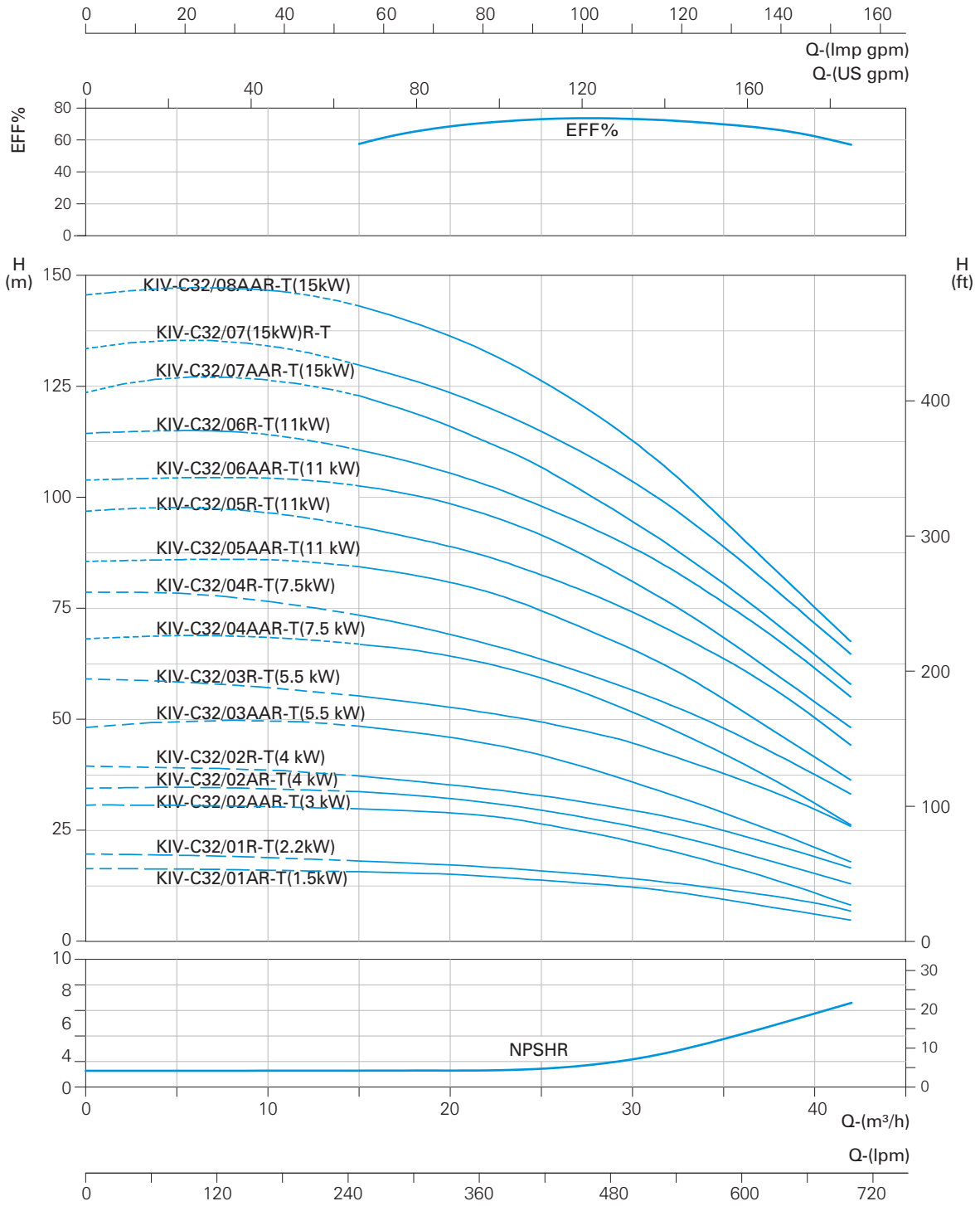

The Given details / drawings / specifications are subject to change without prior notice.

Nominal Flow	32 m³/h
Model	KIV-32
Pipe Size	2½"x2½"

PERFORMANCE DATA

Model	Power		lpm	166.8	250.2	333.6	417	500.4	583.8	700.2
	kW	HP	m³/h	10	15	20	25	30	35	42
KIV-C32/08R-T	15	20	TOTAL DYNAMIC HEAD IN METRES	152	148	141	131	118	101	73
KIV-C32/09AAR-T	18.5	25		166	163	154	143	129	110	77
KIV-C32/09R-T	18.5	25		174	168	160	150	136	117	88
KIV-C32/10AAR-T	18.5	25		185	182	173	160	144	122	89
KIV-C32/10R-T	18.5	25		194	189	180	167	150	132	97
KIV-C32/11AAR-T	22	30		205	202	191	177	160	137	97
KIV-C32/11R-T	22	30		213	208	197	184	165	144	105
KIV-C32/12AAR-T	22	30		225	220	210	195	175	150	107
KIV-C32/12R-T	22	30		232	226	215	202	182	155	113
KIV-C32/13AAR-T	30	40		247	243	231	215	195	167	120
KIV-C32/13R-T	30	40		255	249	237	222	202	173	125
KIV-C32/14AAR-T	30	40		269	263	250	232	210	180	129
KIV-C32/14R-T	30	40		275	269	256	239	215	187	142

* A / AA denote abridged version.

The final digit of the model identification “T” denotes 3 Phase D.O.L motors. For Star Delta Connection replace "T" with "D".

Nominal Flow	32 m³/h
Model	KIV-32
Pipe Size	2½"x2½"

PERFORMANCE CURVE

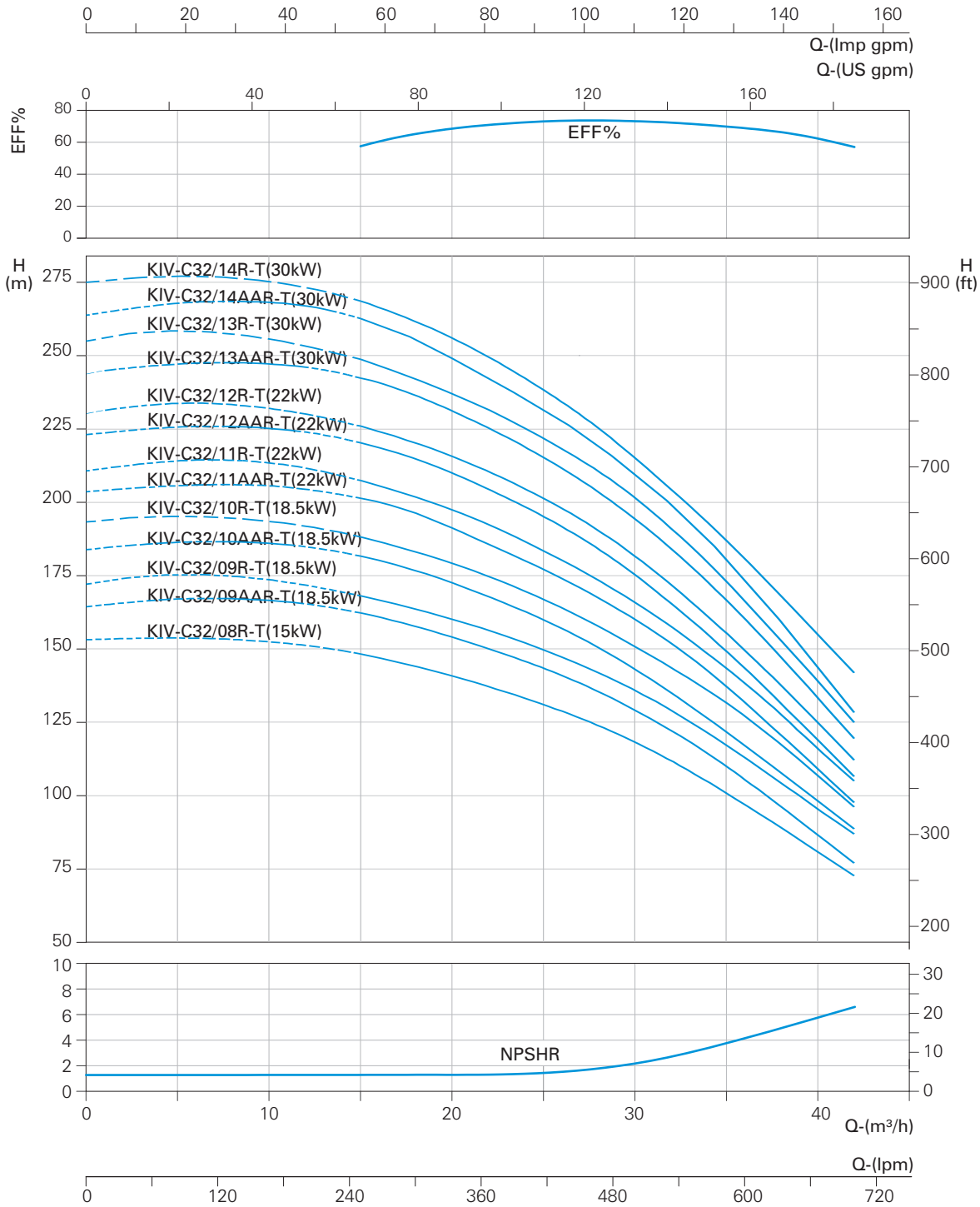

The Given details / drawings / specifications are subject to change without prior notice.

Nominal Flow	44 m³/h
Model	KIV-44
Pipe Size	3"x3"

PERFORMANCE DATA

Model	Power		lpm	166.8	333.6	500.4	666.6	832.8	966.6
	kW	HP	m³/h	10	20	30	40	50	58
KIV-C44/01AR-T	3	4	TOTAL DYNAMIC HEAD IN METRES	24	22	20	18	15	10
KIV-C44/01R-T	4	5.5		25.5	25	22	20	16.5	12.5
KIV-C44/02AAR-T	5.5	7.5		44	41	39	34.5	26	19
KIV-C44/02R-T	7.5	10		50.5	49	45	40.5	34	25
KIV-C44/03AAR-T	11	15		70	68	64	56.5	41	35
KIV-C44/03R-T	11	15		76.5	75	70.5	64	54	44
KIV-C44/04AAR-T	15	20		95	94	89	80	65.5	52
KIV-C44/04R-T	15	20		100	99	95	86	72.5	59
KIV-C44/05AAR-T	18.5	25		120	118	111	100	84	66
KIV-C44/05R-T	18.5	25		130	126	119	107	90.5	74.5
KIV-C44/06AAR-T	22	30		145.5	142.5	136	123	103	81
KIV-C44/06R-T	22	30		156	153	145	131	112	91
KIV-C44/07AAR-T	30	40		170	168	160	145	123	100
KIV-C44/07R-T	30	40		178.5	175	165	150	126	102.5
KIV-C44/08AAR-T	30	40		200	196.5	187	169	143	116
KIV-C44/08R-T	30	40		209.5	205	195	176	150	124
KIV-C44/09AAR-T	30	40		224	220	210	190	162	133
KIV-C44/09R-T	37	50		235	230	220	200	170	140
KIV-C44/10AAR-T	37	50		250	247.5	235	213	180	149
KIV-C44/10R-T	37	50		258	255	242.5	220	187	155
KIV-C44/11AAR-T	45	60		280.5	278	264	238	201	165
KIV-C44/11R-T	45	60		290	285	270	245	210	173
KIV-C44/12AAR-T	45	60		306	305	289	256	215	176
KIV-C44/12R-T	45	60		315.5	313	295	265	224	182
KIV-C44/13AAR-T	45	60		330.5	328	314	284	242	195

* A / AA denote abridged version.

The final digit of the model identification “T” denotes 3 Phase D.O.L motors. For Star Delta Connection replace "T" with "D".

Nominal Flow	44 m³/h
Model	KIV-44
Pipe Size	3"x3"

PERFORMANCE CURVE

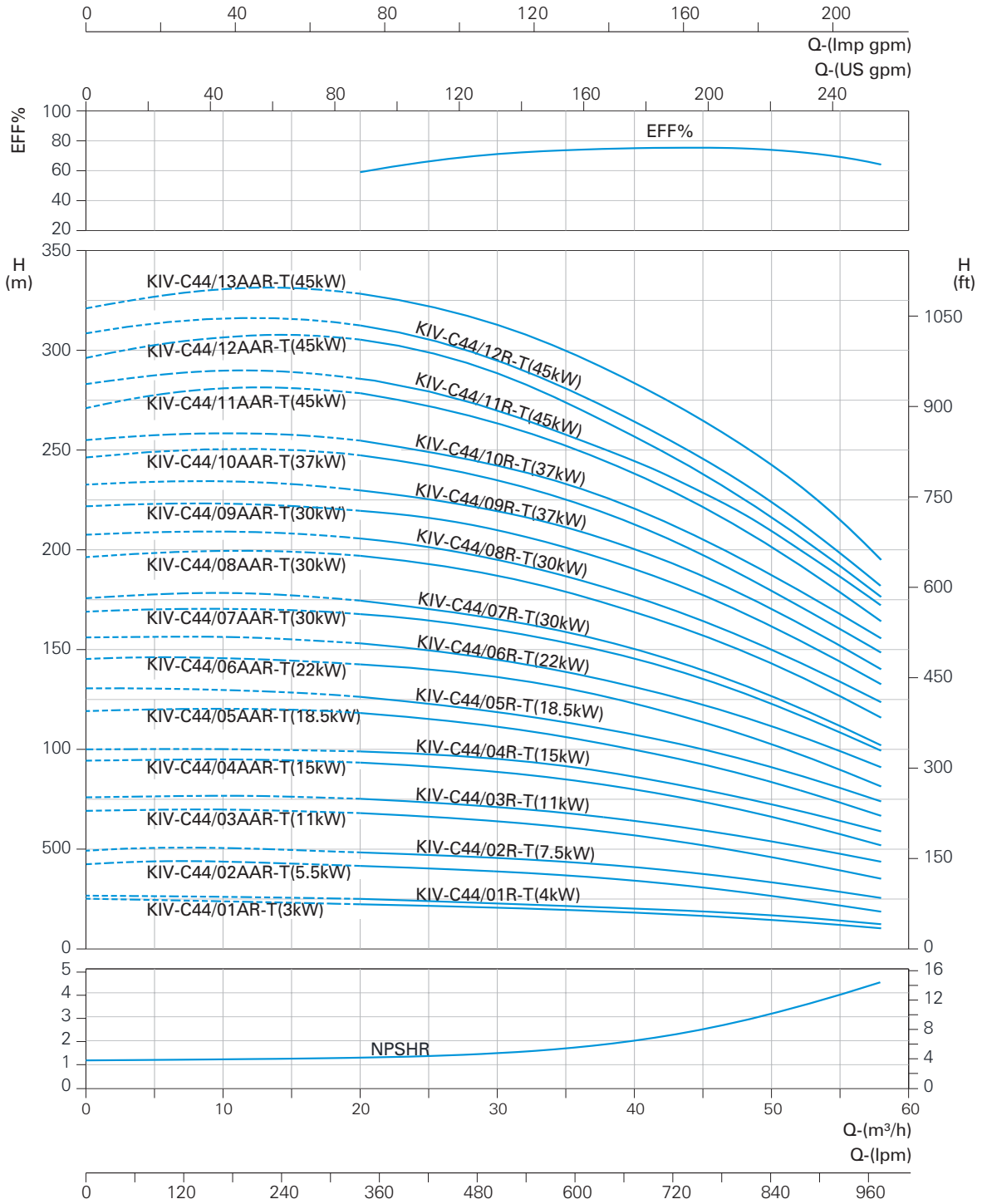

The Given details / drawings / specifications are subject to change without prior notice.

Nominal Flow	66 m³/h
Model	KIV-66
Pipe Size	4"x4"

PERFORMANCE DATA

Model	Power		lpm	333.6	667.2	1000.8	1334.4	1417.8
	kW	HP	m³/h	20	40	60	80	85
KIV-C66/01AR-T	4	5.5	TOTAL DYNAMIC HEAD IN METRES	23	21	17	09	06
KIV-C66/01R-T	5.5	7.5		32	27	23	17	15
KIV-C66/02AAR-T	7.5	10		44	42	35	23	18
KIV-C66/02AR-T	11	15		51	47	39	26	23
KIV-C66/02R-T	11	15		58	52	46	34	28
KIV-C66/03AAR-T	15	20		74	68	58	43	38
KIV-C66/03AR-T	15	20		82	76	66	49	44
KIV-C66/03R-T	18.5	25		87	80	70	55	47
KIV-C66/04AAR-T	18.5	25		103	97	84	60	53
KIV-C66/04AR-T	22	30		112	103	91	67	58
KIV-C66/04R-T	22	30		118	108	95	72	63
KIV-C66/05AAR-T	30	40		135	125	110	79	71
KIV-C66/05AR-T	30	40		142	131	115	88	78
KIV-C66/05R-T	30	40		145	137	121	98	90
KIV-C66/06AAR-T	30	40		163	153	138	103	94
KIV-C66/06AR-T	37	50		170	158	141	110	98
KIV-C66/06R-T	37	50		175	163	144	115	110
KIV-C66/07AAR-T	37	50		192	180	157	123	113
KIV-C66/07AR-T	37	50		198	186	165	130	118
KIV-C66/07R-T	45	60		203	192	170	139	121
KIV-C66/08AAR-T	45	60		211	204	184	144	132
KIV-C66/08AR-T	45	60		227	216	192	151	136

* A / AA denote abridged version.

The final digit of the model identification “T” denotes 3 Phase D.O.L motors. For Star Delta Connection replace "T" with "D".

Nominal Flow	66 m³/h
Model	KIV-66
Pipe Size	4"x4"

PERFORMANCE CURVE

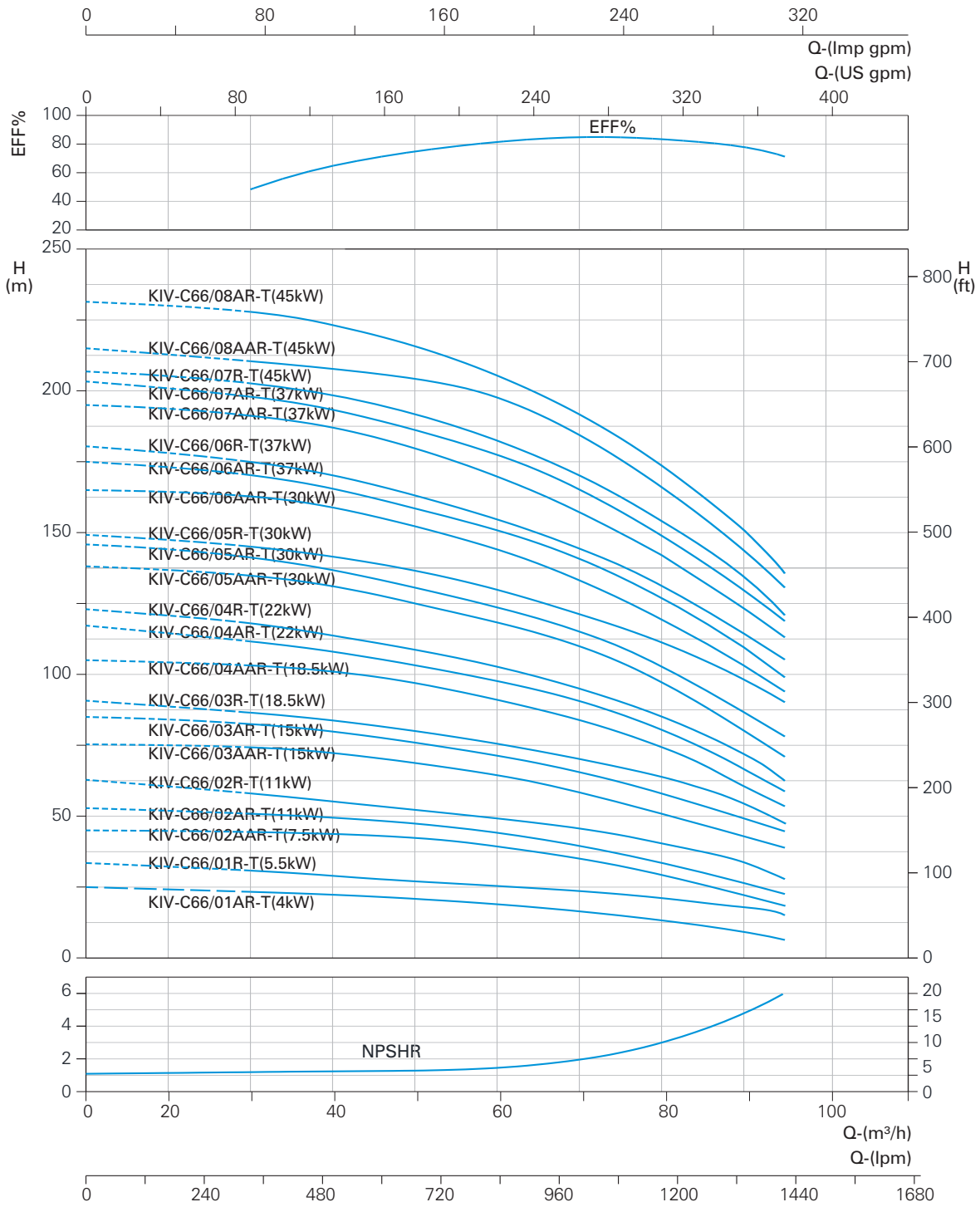

The Given details / drawings / specifications are subject to change without prior notice.

Nominal Flow	90 m³/h
Model	KIV-90
Pipe Size	4"x4"

PERFORMANCE DATA

Model	Power		lpm	333.6	667.2	1000.8	1334.4	1668	1834.8
	kW	HP	m³/h	20	40	60	80	100	110
KIV-C90/01AR-T	5.5	7.5	TOTAL DYNAMIC HEAD IN METRES	26	23	20	17	12	7
KIV-C90/01R-T	7.5	10		29	26	23	21	15	12
KIV-C90/02AR-T	11	15		53	48	43	37	28	21
KIV-C90/02R-T	15	20		62	56	50	44	35	27
KIV-C90/03AR-T	18.5	25		80	75	68	59	46	34
KIV-C90/03R-T	22	30		92	86	77	67	55	43
KIV-C90/04AAR-T	30	40		114	106	96	85	68	56
KIV-C90/04R-T	30	40		125	116	104	91	74	60
KIV-C90/05AAR-T	37	50		144	136	122	108	88	75
KIV-C90/05R-T	37	50		156	146	132	116	96	81
KIV-C90/06AAR-T	45	60		174	165	150	132	110	89
KIV-C90/06R-T	45	60		184	174	160	141	115	90

* A / AA denote abridged version.

The final digit of the model identification “T” denotes 3 Phase D.O.L motors. For Star Delta Connection replace "T" with "D".

Nominal Flow	90 m³/h
Model	KIV-90
Pipe Size	4"x4"

PERFORMANCE CURVE

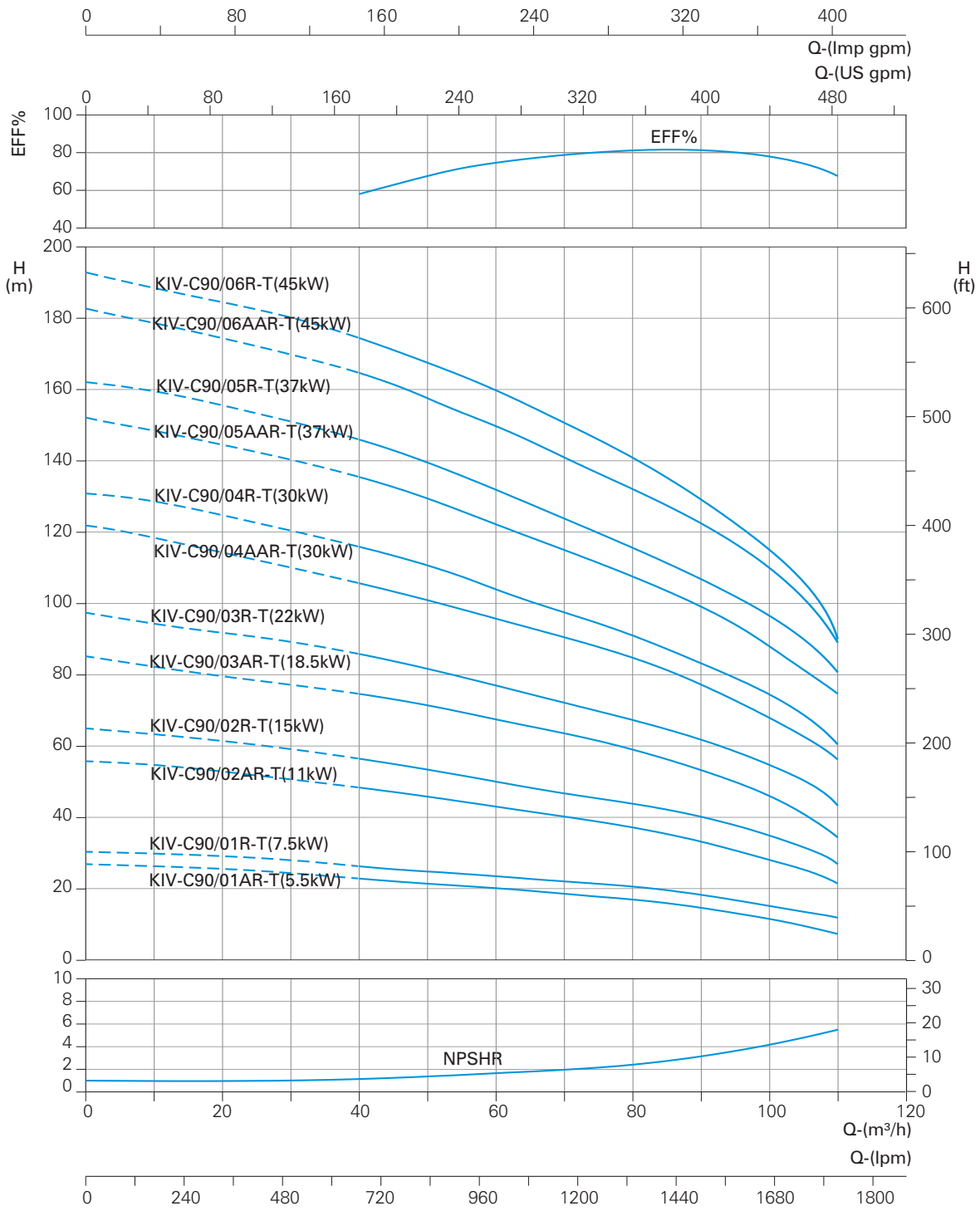

The Given details / drawings / specifications are subject to change without prior notice.

Nominal Flow	120 m³/h
Model	KIV-120
Pipe Size	5"x5"

PERFORMANCE DATA

Model	Power		lpm	0	13.8	20.83	27.77	34.72	41.66	45
	kW	HP	m³/h	0	50	75	100	125	150	162
KIV-C120/01R-T	11	15	TOTAL DYNAMIC HEAD IN METRES	29	26	24	21	18	14	12
KIV-C120/02AR-T	18.5	25		50	49	44	40	35	25	20
KIV-C120/02R-T	22	30		58	56	49	44	38	30	25
KIV-C120/03R-T	30	40		86	81	74	66	56	45	37
KIV-C120/04AR-T	37	50		105	100	92	83	70	52	43
KIV-C120/04R-T	45	60		114	108	99	90	78	60	50
KIV-C120/05AR-T	45	60		135	129	119	108	93	70	58
KIV-C120/05R-T	55	75		144	134	127	116	102	80	68
KIV-C120/06AR-T	55	75		163	160	151	137	118	95	80
KIV-C120/07R-T	75	100		202	194	180	164	144	114	97

* A / AA denote abridged version.

Nominal Flow	120 m³/h
Model	KIV-120
Pipe Size	5"x5"

PERFORMANCE CURVE

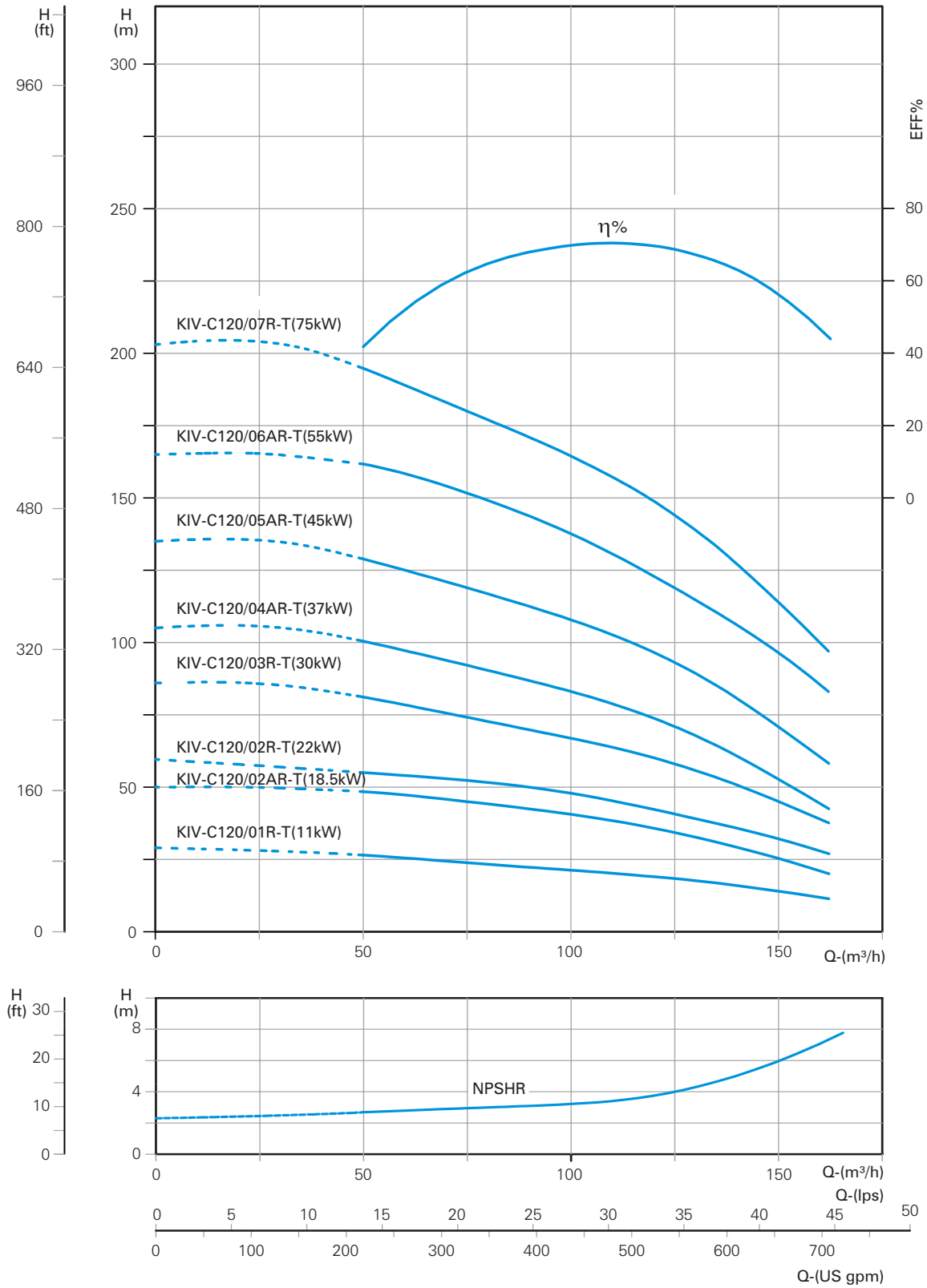

The Given details / drawings / specifications are subject to change without prior notice.

Nominal Flow	150 m³/h
Model	KIV-150
Pipe Size	5"x5"

PERFORMANCE DATA

Model	Power		lpm	0	13.8	22.24	33.36	44.48	55.6
	kW	HP	m³/h	0	50	80	120	160	200
KIV-C150/01AR-T	11	15	TOTAL DYNAMIC HEAD IN METRES	25	22	20.5	17	13	6
KIV-C150/01R-T	15	20		33	30	26.5	23	20	14.5
KIV-C150/02AR-T	22	30		55	52	47	40	33	20.5
KIV-C150/02R-T	30	40		61	60	54	46	39	27
KIV-C150/03BR-T	30	40		77	75	69	59	47	28
KIV-C150/03R-T	37	50		95.5	91	80.5	70	60	41
KIV-C150/04AR-T	45	60		117	114	103	88.5	76	50
KIV-C150/05BR-T	55	75		140	186	123	107	90	59.5
KIV-C150/05R-T	75	100		155	150	136.5	118	100	71
KIV-C150/06R-T	75	100		186	180	165	142	119	84

* A / AA denote abridged version.

Nominal Flow	150 m³/h
Model	KIV-150
Pipe Size	5"x5"

PERFORMANCE CURVE

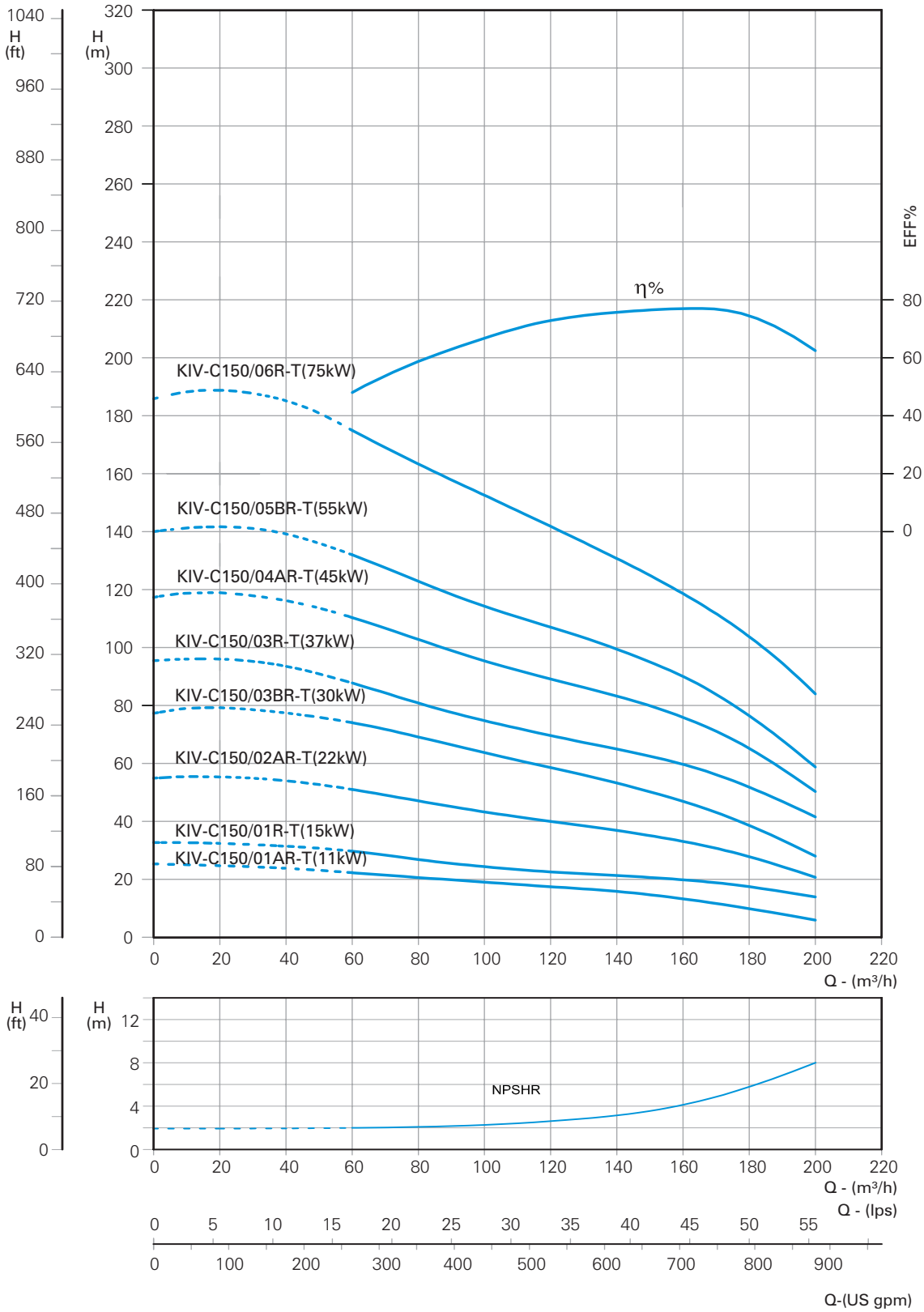

The Given details / drawings / specifications are subject to change without prior notice.

Nominal Flow	200 m³/h
Model	KIV-200
Pipe Size	6"x6"

PERFORMANCE DATA

Model	Power		lpm	0	13.8	27.78	41.67	55.56	69.44	77.78
	kW	HP	m³/h	0	50	100	150	200	250	280
KIV-C200/01AR-T	15	20	TOTAL DYNAMIC HEAD IN METRES	26	25	23	19	15	7	4
KIV-C200/01R-T	18.5	25		38	36	32	27	23.5	16.5	10.5
KIV-C200/02BR-T	30	40		53	52	49	42	35	21	11
KIV-C200/02AR-T	37	50		64	61	55	49	42	30	18
KIV-C200/02R-T	45	60		82	76	68	58	50	41	29.5
KIV-C200/03BR-T	55	75		90	88	80	71	61	43	24
KIV-C200/03AR-T	55	75		101	97	88	76	66	49	33
KIV-C200/03R-T	75	100		120	112	102	87	74	56	32
KIV-C200/04BR-T	75	100		127	125	114	101	86	64	40
KIV-C200/04AR-T	75	100		138	134	121	106	92	70	48
KIV-C200/04R-T	75	100		156	147	137	120	102	80	52
KIV-C200/05BR-T	90	120		165	161	146	129	111	83	55
KIV-C200/05AR-T	90	120		175	170	153	134	118	89	63
KIV-C200/05R-T	90	120		196	185	172	150	128	100	69
KIV-C200/06BR-T	110	150		201	196	178	156	136	101	70
KIV-C200/06AR-T	110	150		212	206	186	163	141	109	78
KIV-C200/06R-T	110	150		225	218	195	170	148	115	86

* A / AA denote abridged version.

Nominal Flow	200 m³/h
Model	KIV-200
Pipe Size	6"x6"

PERFORMANCE CURVE

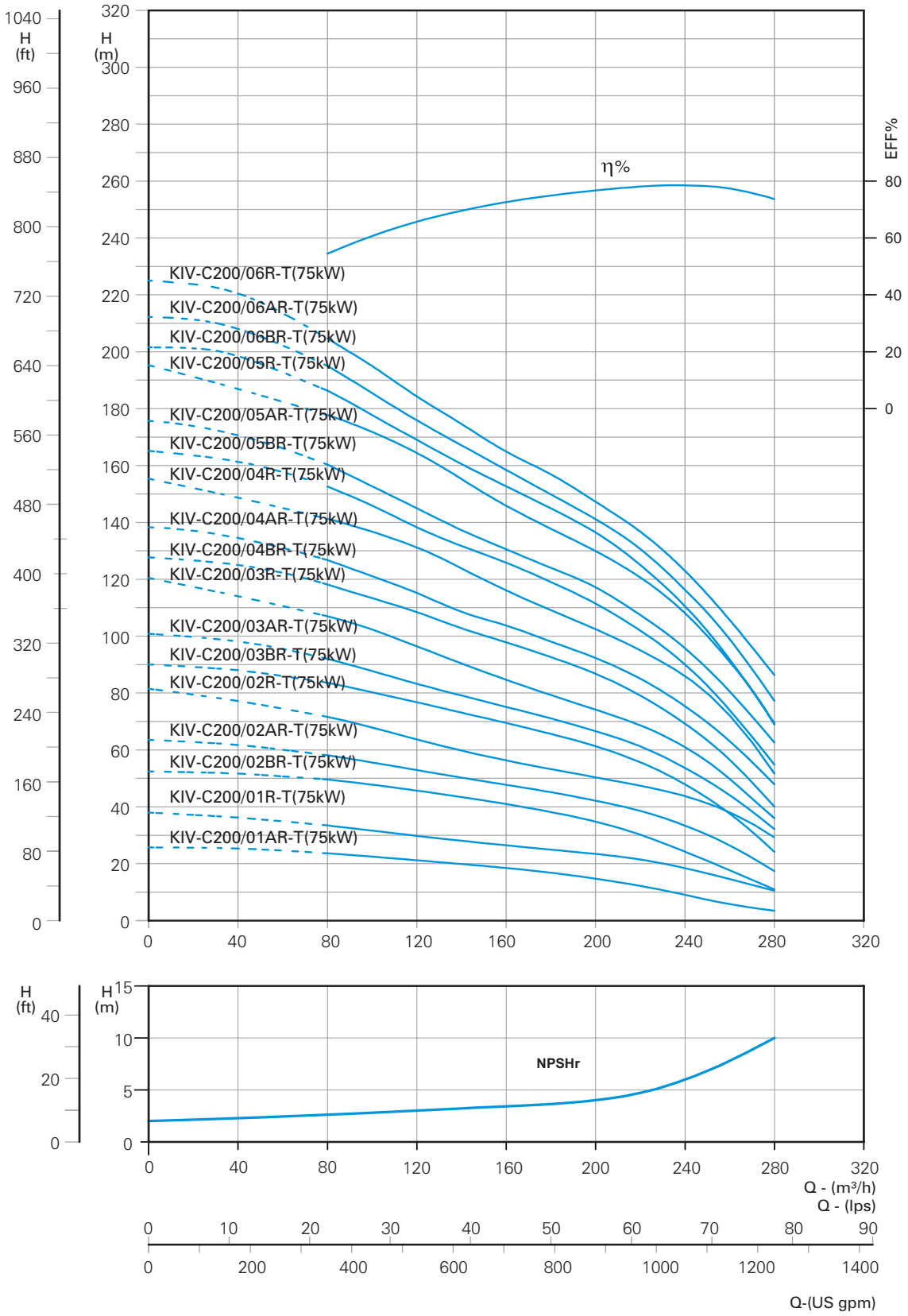

The Given details / drawings / specifications are subject to change without prior notice.

Nominal Flow	1 m³/h
Model	KIV-1
Pipe Size	1"x1" / 1¼"x1¼"

DIMENSIONAL DATA & DRAWINGS

Model	Power		DIMENSIONS IN mm (Approx.)									APPROX.WEIGHT IN Kg				
			P			M		X		Y	Z	PUMP			MOTOR	
	kW	HP	KIVC (R)	KIVS&N (P)	KIVS&N (R)	1Ph	3Ph	1Ph	3Ph			KIVC (R)	KIVS&N (P)	KIVS&N (R)	1Ph	3Ph
KIV-C1/02R-T	0.37	0.5	269	249	273	222	217	195	185	Ø140	145	14.45	9.25	10.85	10	9
KIV-C1/03R-T	0.37	0.5	287	267	291	222	217	195	185	Ø140	145	15.05	9.85	11.45	10	9
KIV-C1/04R-T	0.37	0.5	305	285	309	222	217	195	185	Ø140	145	15.68	10.48	12.08	10	9
KIV-C1/05R-T	0.37	0.5	323	303	327	222	217	195	185	Ø140	145	16.30	11.10	12.70	10	9
KIV-C1/06R-T	0.37	0.5	341	321	345	222	217	195	185	Ø140	145	16.93	11.73	13.33	10	9
KIV-C1/07R-T	0.37	0.5	359	339	363	222	217	195	185	Ø140	145	17.55	12.35	13.95	10	9
KIV-C1/08R-T	0.55	0.75	377	357	381	242	232	195	185	Ø140	145	18.18	12.98	14.58	11	10
KIV-C109R-T	0.55	0.75	395	375	399	242	232	195	185	Ø140	145	18.80	13.60	15.20	11	10
KIV-C1/10R-T	0.55	0.75	413	393	417	242	232	195	185	Ø140	145	19.43	14.23	15.83	11	10
KIV-C1/11R-T	0.5	0.75	431	411	435	242	232	195	185	Ø140	145	20.05	14.85	16.45	11	10
KIV-C1/12R-T	0.75	1.0	449	429	453	267	252	215	205	Ø160	145	20.68	15.48	17.08	12	11
KIV-C1/13R-T	0.75	1.0	467	447	471	267	252	215	205	Ø160	145	21.30	16.10	17.70	12	11
KIV-C1/15R-T	0.75	1.0	503	483	507	267	252	215	205	Ø160	145	22.55	17.35	18.95	12	11
KIV-C1/17R-T	1.1	1.5	539	519	543	284	264	215	205	Ø160	145	23.80	18.60	20.20	16	15
KIV-C1/19R-T	1.1	1.5	575	555	579	284	264	215	205	Ø160	145	25.05	19.85	21.45	16	15
KIV-C1/21R-T	1.1	1.5	611	591	615	284	264	215	205	Ø160	145	26.30	21.10	22.70	16	15
KIV-C1/23R-T	1.1	1.5	647	627	651	284	264	215	205	Ø160	145	27.55	22.35	23.95	16	15
KIV-C1/25R-T	1.5	2	701	681	705	294	295	242	222	Ø187	163	29.00	23.80	25.40	20	20
KIV-C1/27R-T	1.5	2	737	717	741	294	295	242	222	Ø187	163	30.25	25.05	26.65	20	20
KIV-C1/30R-T	1.5	2	791	771	795	294	295	242	222	Ø187	163	32.15	26.95	28.55	20	20
KIV-C1/33R-T	2.2	3	845	825	849	320	295	242	222	Ø187	163	34.05	28.85	30.45	21.5	20
KIV-C1/36R-T	2.2	3	899	879	903	320	295	242	222	Ø187	163	35.95	30.75	32.35	21.5	20

Letter "R" stands for Round Flange and it will be replaced with "L" and "B" for Oval Flange and PJE connection.

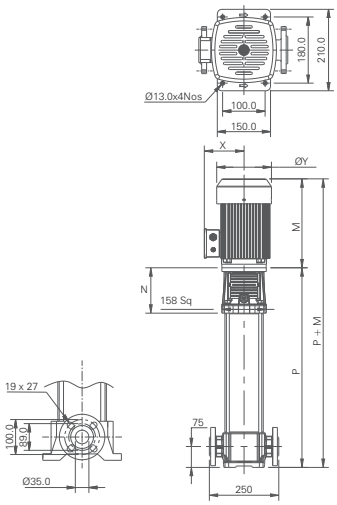

KIVC (ROUND FLANGE)

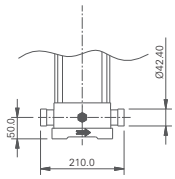

KIVS & N (PJE)

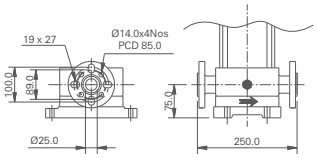

KIVS & N (ROUND FLANGE)

Nominal Flow	2 m³/h
Model	KIV-2
Pipe Size	1"x1" / 1¼"x1¼"

DIMENSIONAL DATA & DRAWINGS

Model	Power		DIMENSIONS IN mm (Approx.)									APPROX.WEIGHT IN Kg				
			P			M		X		Y	Z	PUMP			MOTOR	
	kW	HP	KIVC (R)	KIVS&N (P)	KIVS&N (P)	1Ph	3Ph	1Ph	3Ph			KIVC (R)	KIVS&N (P)	KIVS&N (P)	1Ph	3Ph
KIV-C2/02R-T	0.37	0.50	269	249	273	222	217	195	185	Ø140	145	14.50	9.30	10.90	10	9
KIV-C2/03R-T	0.37	0.50	287	267	291	222	217	195	185	Ø140	145	15.15	9.90	11.50	10	9
KIV-C2/04R-T	0.55	0.75	305	285	309	242	232	195	185	Ø140	145	15.80	10.55	12.15	11	10
KIV-C2/05R-T	0.55	0.75	323	303	327	242	232	195	185	Ø140	145	16.40	11.20	12.80	11	10
KIV-C2/06R-T	0.75	1.0	341	321	345	267	252	215	205	Ø160	145	17.00	11.80	13.40	12	11
KIV-C2/07R-T	0.75	1.0	359	339	363	267	252	215	205	Ø160	145	17.65	12.40	14.00	12	11
KIV-C2/09R-T	1.1	1.5	395	375	399	284	264	215	205	Ø160	145	18.90	13.70	15.30	16	15
KIV-C2/11R-T	1.1	1.5	431	411	435	284	264	215	205	Ø160	145	19.50	14.90	16.50	16	15
KIV-C2/13R-T	1.5	2.0	485	465	489	294	295	242	222	Ø187	163	21.00	16.40	17.95	20	20
KIV-C2/15R-T	1.5	2.0	521	501	525	294	295	242	222	Ø187	163	22.20	17.60	19.20	20	20
KIV-C2/18R-T	2.2	3.0	575	555	579	320	295	242	222	205SQ	163	24.10	19.50	21.10	21.50	20
KIV-C2/22R-T	2.2	3.0	647	627	651	320	295	242	222	205SQ	163	26.60	22.00	23.60	21.50	20
KIV-C2/26R-T	3.0	4.0	719	699	723	340	320	242	222	205SQ	163	29.10	24.50	26.10	23	21.5

Letter "R" stands for Round Flange and it will be replaced with "L" and "B" for Oval Flange and PJE connection.

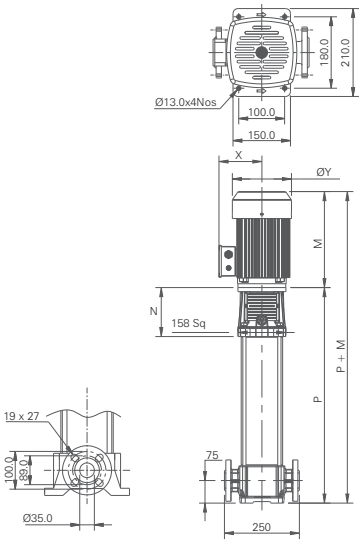

KIVC (ROUND FLANGE)

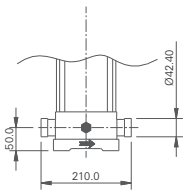

KIVS & N (PJE)

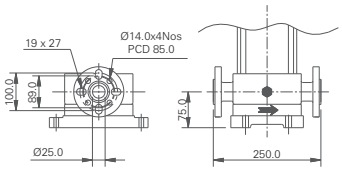

KIVS & N (ROUND FLANGE)

The Given details / drawings / specifications are subject to change without prior notice.

Nominal Flow	3 m³/h
Model	KIV-3
Pipe Size	1"x1" / 1¼"x1¼"

DIMENSIONAL DATA & DRAWINGS

Model	Power		DIMENSIONS IN mm (Approx.)									APPROX.WEIGHT IN Kg				
			P			M		X		Y	Z	PUMP			MOTOR	
	kW	HP	KIVC (R)	KIVS&N (PJE)	KIVS&N (R)	1Ph	3Ph	1Ph	3Ph			KIVC (R)	KIVS&N (PJE)	KIVS&N (R)	1Ph	3Ph
KIV-C3/02R-T	0.37	0.5	269	249	273	222	217	195	185	Ø140	145	14.45	9.25	10.85	10.0	9.0
KIV-C3/03R-T	0.37	0.5	287	267	291	222	217	195	185	Ø140	145	15.05	9.85	11.45	10.0	9.0
KIV-C3/04R-T	0.37	0.5	305	285	309	222	217	195	185	Ø140	145	15.68	10.48	12.08	10.0	9.0
KIV-C3/05R-T	0.37	0.5	323	303	327	222	217	195	185	Ø140	145	16.30	11.10	12.70	10.0	9.0
KIV-C3/06R-T	0.55	0.75	341	321	345	242	232	195	185	Ø140	145	16.93	11.73	13.33	11.0	10.0
KIV-C3/07R-T	0.55	0.75	359	339	363	242	232	195	185	Ø140	145	17.55	12.35	13.95	11.0	10.0
KIV-C3/08R-T	0.75	1.0	377	357	381	267	252	215	205	Ø160	145	18.18	12.98	14.58	12.0	11.0
KIV-C3/09R-T	0.75	1.0	395	375	399	267	252	215	205	Ø160	145	18.80	13.60	15.20	12.0	11.0
KIV-C3/10R-T	0.75	1.0	413	393	417	267	252	215	205	Ø160	145	19.43	14.23	15.83	12.0	11.0
KIV-C3/11R-T	1.1	1.5	431	411	435	284	264	215	205	Ø160	145	20.05	14.85	16.45	16.0	15.0
KIV-C3/12R-T	1.1	1.5	449	429	453	284	264	215	205	Ø160	145	20.68	15.48	17.08	16.0	15.0
KIV-C3/13R-T	1.1	1.5	467	447	471	284	264	215	205	Ø160	145	21.30	16.10	17.70	16.0	15.0
KIV-C3/15R-T	1.1	1.5	503	483	507	284	264	215	205	Ø160	145	22.55	17.35	18.95	16.0	15.0
KIV-C3/17R-T	1.5	2.0	557	537	561	294	295	242	222	Ø187	163	24.00	18.80	20.40	20.0	20.0
KIV-C3/19R-T	1.5	2.0	593	573	597	294	295	242	222	Ø187	163	25.25	20.25	21.85	21.50	20.0
KIV-C3/21R-T	2.2	3.0	629	609	633	320	295	242	222	Ø187	163	26.50	21.70	23.30	21.50	20.0
KIV-C3/23R-T	2.2	3.0	665	645	669	320	295	242	222	Ø187	163	27.75	23.15	24.75	21.50	20.0
KIV-C3/25R-T	2.2	3.0	701	681	705	320	295	242	222	Ø187	163	29.00	24.60	26.20	21.50	20.0
KIV-C3/27R-T	2.2	3.0	737	717	741	320	295	242	222	Ø187	163	30.25	26.05	27.65	21.50	20.0
KIV-C3/29R-T	2.2	3.0	773	753	777	320	295	242	222	Ø187	163	31.50	27.50	29.10	21.50	20.0
KIV-C3/31R-T	3.0	4.0	809	789	813	340	320	242	222	Ø187	163	32.75	28.75	30.35	23.00	21.50
KIV-C3/33R-T	3.0	4.0	845	825	849	340	320	242	222	Ø187	163	34.05	30.05	31.65	23.00	21.50
KIV-C3/36R-T	3.0	4.0	899	879	903	340	320	242	222	Ø187	163	35.95	31.95	33.55	23.00	21.50

Letter "R" stands for Round Flange and it will be replaced with "L" and "B" for Oval Flange and PJE connection.

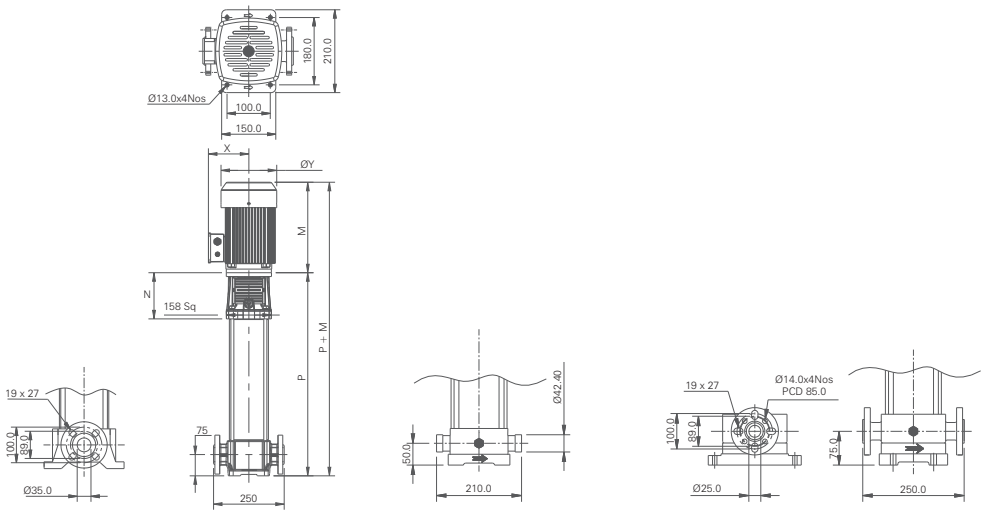

KIVC (ROUND FLANGE) KIVS & N (PJE) KIVS & N (ROUND FLANGE)

Nominal Flow	4 m³/h
Model	KIV-4
Pipe Size	1¼"x1¼"

DIMENSIONAL DATA & DRAWINGS

Model	Power		DIMENSIONS IN mm (Approx.)									APPROX.WEIGHT IN Kg				
			P			M		X		Y	Z	PUMP			MOTOR	
	kW	HP	KIVC (R)	KIVS&N (P)	KIVS&N (P)	1Ph	3Ph	1Ph	3Ph			KIVC (R)	KIVS&N (P)	KIVS&N (P)	1Ph	3Ph
KIV-C4/01R-T	0.37	0.50	287	267	291	222	217	195	185	Ø140	145	15.25	10.05	11.65	10	9
KIV-C4/02R-T	0.37	0.50	287	294	318	222	217	195	185	Ø140	145	16.15	10.95	12.55	10	9
KIV-C4/03R-T	0.55	0.75	314	321	345	242	232	195	185	Ø140	145	17.05	11.85	13.45	11	10
KIV-C4/04R-T	0.75	1.0	341	348	372	267	252	215	205	Ø160	145	17.95	12.75	14.35	12	11
KIV-C4/05R-T	1.1	1.5	368	375	399	284	264	215	205	Ø160	145	18.85	13.65	15.25	16	15
KIV-C4/06R-T	1.1	1.5	395	402	426	284	264	215	205	Ø160	163	19.75	14.55	16.15	16	15
KIV-C4/07R-T	1.5	2.0	440	447	471	295	295	242	222	Ø187	163	20.90	15.65	17.05	20	20
KIV-C4/08R-T	1.5	2.0	467	474	498	295	295	242	222	Ø187	163	21.80	16.55	17.95	20	20
KIV-C4/10R-T	2.2	3.0	521	528	552	320	295	242	222	205SQ	163	23.60	18.35	19.75	21.5	20
KIV-C4/12R-T	2.2	3.0	575	582	606	320	295	242	222	205SQ	163	25.40	20.15	21.55	21.5	20
KIV-C4/14R-T	3	4.0	629	636	660	340	320	242	222	205SQ	163	27.20	21.95	23.35	23	21.50
KIV-C4/16R-T	3	4.0	683	690	714	340	320	242	222	205SQ	163	29.00	23.75	25.15	23	21.50
KIV-C4/19R-T	4	5.5	764	771	795	-	340	-	222	224SQ	163	31.70	26.45	27.85	-	26
KIV-C4/22R-T	4	5.5	845	852	876	-	340	-	222	224SQ	163	34.40	29.15	30.55	-	26

Letter "R" stands for Round Flange and it will be replaced with "L" and "B" for Oval Flange and PJE connection.

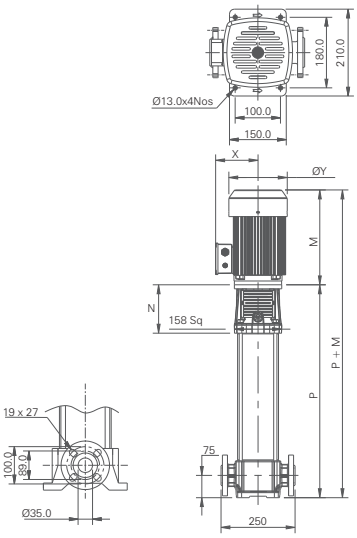

KIVC (ROUND FLANGE)

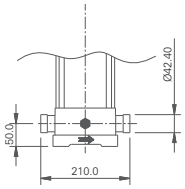

KIVS & N (PJE)

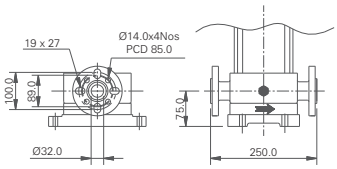

KIVS & N (ROUND FLANGE)

The Given details / drawings / specifications are subject to change without prior notice.

Nominal Flow	5 m³/h
Model	KIV-5
Pipe Size	1¼"x1¼"

DIMENSIONAL DATA & DRAWINGS

Model	Power		DIMENSIONS IN mm (Approx.)									APPROX.WEIGHT IN Kg				
			P			M		X		Y	Z	PUMP			MOTOR	
	kW	HP	KIVC (R)	KIVS&N (PJE)	KIVS&N (R)	1Ph	3Ph	1Ph	3Ph			KIVC (R)	KIVS&N (PJE)	KIVS&N (R)	1Ph	3Ph
KIV-C5/02R-T	0.37	0.5	287	267	291	222	217	195	185	Ø140	145	16.10	10.90	12.50	10.0	9.0
KIV-C5/03R-T	0.55	0.75	314	294	318	242	232	195	185	Ø140	145	17.00	11.80	13.40	11.0	10.0
KIV-C5/04R-T	0.55	0.75	341	321	345	242	232	195	185	Ø140	145	17.90	12.70	14.30	11.0	10.0
KIV-C5/05R-T	0.75	1.0	368	348	372	267	252	215	205	Ø160	145	18.80	13.60	15.20	12.0	11.0
KIV-C5/06R-T	1.1	1.5	395	375	399	284	264	215	205	Ø160	145	19.70	14.50	16.10	16.0	15.0
KIV-C5/07R-T	1.1	1.5	422	402	426	284	264	215	205	Ø160	145	20.60	15.40	17.00	16.0	15.0
KIV-C5/08R-T	1.1	1.5	449	429	453	284	264	215	205	Ø160	145	21.50	16.30	17.90	16.0	15.0
KIV-C5/09R-T	1.5	2.0	494	474	498	294	295	242	222	Ø187	163	22.60	17.40	19.00	20.0	20.0
KIV-C5/10R-T	1.5	2.0	521	501	525	294	295	242	222	Ø187	163	23.50	18.30	19.90	20.0	20.0
KIV-C5/11R-T	2.2	3.0	548	528	552	320	295	242	222	Ø187	163	24.40	19.20	20.80	21.50	20.0
KIV-C5/12R-T	2.2	3.0	575	555	579	320	295	242	222	Ø187	163	25.30	20.10	21.70	21.50	20.0
KIV-C5/13R-T	2.2	3.0	602	582	606	320	295	242	222	Ø187	163	26.20	21.00	22.60	21.50	20.0
KIV-C5/14R-T	2.2	3.0	629	609	633	320	295	242	222	Ø187	163	27.10	21.90	23.50	21.50	20.0
KIV-C5/15R-T	2.2	3.0	656	636	660	320	295	242	222	Ø187	163	28.00	22.80	24.40	21.50	20.0
KIV-C5/16R-T	2.2	3.0	683	663	687	320	295	242	222	Ø187	163	28.90	23.70	25.30	21.50	20.0
KIV-C5/18R-T	3.0	4.0	737	717	741	340	295	242	222	Ø187	163	30.70	25.50	27.10	23.0	21.50
KIV-C5/20R-T	3.0	4.0	791	771	795	340	320	242	222	Ø187	163	32.50	27.30	28.90	23.0	21.50
KIV-C5/22R-T	4.0	5.5	845	825	849	-	320	242	222	Ø187	163	34.30	29.10	30.70	-	26.0
KIV-C5/24R-T	4.0	5.5	899	879	903	-	340	-	222	Ø187	163	36.10	30.90	32.50	-	26.0
KIV-C5/26R-T	4.0	5.5	953	933	957	-	340	-	222	Ø187	163	37.90	32.70	34.30	-	26.0
KIV-C5/29R-T	4.0	5.5	1034	1014	1038	-	340	-	222	Ø187	163	40.60	35.40	37.00	-	26.0
KIV-C5/32R-T	5.5	7.5	1149	1129	1153	-	385	-	190	Ø254	197	43.60	38.40	40.00	-	70.50
KIV-C5/36R-T	5.5	7.5	1257	1237	1261	-	385	-	190	Ø254	197	47.20	42.00	43.60	-	70.50

Letter "R" stands for Round Flange and it will be replaced with "L" and "B" for Oval Flange and PJE connection.

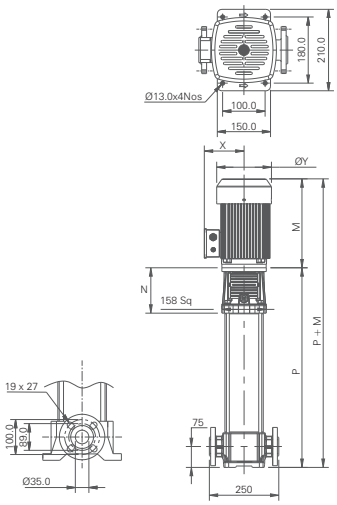

KIVC (ROUND FLANGE)

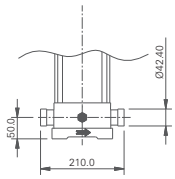

KIVS & N (PJE)

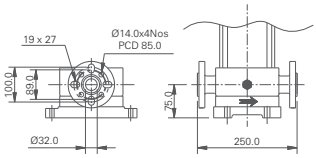

KIVS & N (ROUND FLANGE)

Nominal Flow	10 m³/h
Model	KIV-10
Pipe Size	1½"x1½"

DIMENSIONAL DATA & DRAWINGS

Model	Power		DIMENSIONS IN mm (Approx.)									APPROX.WEIGHT IN Kg				
			P1	M2		P3	P4	X		ØY	Z	PUMP			MOTOR	
	kW	HP		1Ph	3Ph			1Ph	3Ph			KIVC (R)	KIVS&N (P)	KIVS&N (R)	1Ph	3Ph
KIV-C10/01R-T	0.37	0.5	308	222	217	312	312	132.5	118.5	138	173	32.5	27.5	28.5	9.0	8.0
KIV-C10/02R-T	0.75	1	338	267	252	342	342	147	116	138	173	33.5	28.5	29.5	12.0	14.0
KIV-C10/03R-T	1.1	1.5	368	284	265	372	372	141	120	160	173	34.5	29.5	30.5	13.5	13.0
KIV-C10/04R-T	1.5	2	413	280	292	417	417	144	131	176	187	35.5	30.5	31.5	16.5	15.0
KIV-C10/05R-T	2.2	3	443	315	311	447	447	144	131	176	187	36.5	31.5	32.5	20.0	17.5
KIV-C10/06R-T	2.2	3	473	315	311	477	477	144	131	176	187	37.5	32.5	33.5	20.0	17.5
KIV-C10/07R-T	3	4	506	-	324	510	510	-	144	197	190	38.5	33.5	34.5	-	24.5
KIV-C10/08R-T	3	4	536	-	324	540	540	-	144	197	190	39.5	34.5	35.5	-	24.5
KIV-C10/09R-T	3	4	566	-	324	570	570	-	144	197	190	40.5	35.5	36.5	-	24.5
KIV-C10/10R-T	4	5.5	596	-	350	600	600	-	135	187	190	41.5	36.5	37.5	-	27.5
KIV-C10/12R-T	4	5.5	656	-	350	660	660	-	135	187	190	43.5	38.5	39.5	-	27.5
KIV-C10/14R-T	5.5	7.5	742	-	385	746	746	-	205	257	216	49.5	44.5	45.5	-	49.0
KIV-C10/16R-T	5.5	7.5	802	-	385	806	806	-	205	257	216	51.5	46.5	47.5	-	49.0
KIV-C10/18R-T	7.5	10	862	-	424	866	866	-	205	257	216	53.5	48.5	49.5	-	50.5
KIV-C10/20R-T	7.5	10	922	-	424	926	926	-	205	257	216	55.5	50.5	51.5	-	50.5
KIV-C10/22R-T	7.5	10	982	-	424	986	986	-	205	257	216	57.5	52.5	53.5	-	50.5

Letter "R" stands for Round Flange and it will be replaced with "L" and "B" for Oval Flange and PJE connection.

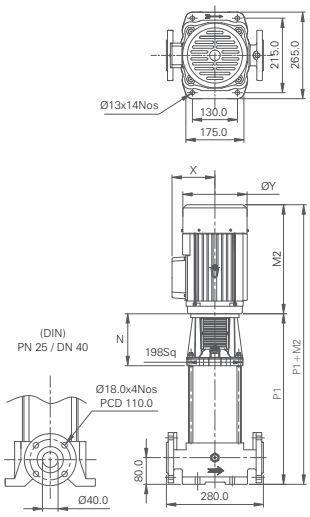

KIVC (ROUND FLANGE)

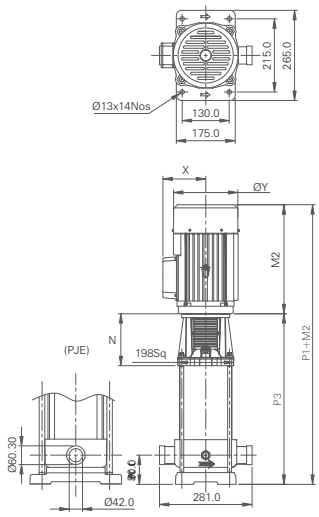

KIVS & N (PJE)

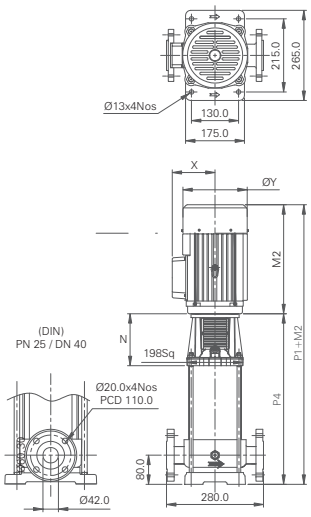

KIVS & N (ROUND FLANGE)

The Given details / drawings / specifications are subject to change without prior notice.

Nominal Flow	15 m³/h
Model	KIV-15
Pipe Size	2"x2"

DIMENSIONAL DATA & DRAWINGS

Model	Power		DIMENSIONS IN mm (Approx.)								APPROX.WEIGHT IN Kg			
			P1	P3	M2		X		ØY	Z	PUMP		MOTOR	
	kW	HP	KIVC (R)	KIVS&N (R)	1Ph	3Ph	1Ph	3Ph			KIVC (R)	KIVS&N (R)	1Ph	3Ph
KIV-C15/01R-T	1.1	1.5	348	343	284	265	141	120	160	173	38	33	13.5	13
KIV-C15/02R-T	2.2	3	407	402	315	311	144	131	170	187	39	34	20	17.5
KIV-C15/03R-T	3	4	455	450	-	324	-	144	197	190	40	35	-	24.5
KIV-C15/04R-T	4	5.5	500	495	-	350	-	162	187	190	41	36	-	27.5
KIV-C15/05R-T	4	5.5	545	540	-	350	-	162	187	190	42	37	-	27.5
KIV-C15/06R-T	5.5	7.5	616	611	-	385	-	205	257	216	46	41	-	49
KIV-C15/07R-T	5.5	7.5	661	656	-	385	-	205	257	216	47	42	-	49
KIV-C15/08R-T	7.5	10	706	701	-	424	-	205	257	216	48	43	-	50.5
KIV-C15/09R-T	7.5	10	751	746	-	424	-	205	257	216	49	44	-	50.5
KIV-C15/10R-T	11	15	885	880	-	500.5	-	261	314	305	68	63	-	107
KIV-C15/12R-T	11	15	975	970	-	500.5	-	261	314	305	70	65	-	107
KIV-C15/14R-T	11	15	1065	1060	-	500.5	-	261	314	305	72	67	-	107
KIV-C15/17R-T	15	20	1200	1195	-	500.5	-	261	314	305	75	70	-	117

Letter "R" stands for Round Flange and it will be replaced with "L" and "B" for Oval Flange and PJE connection.

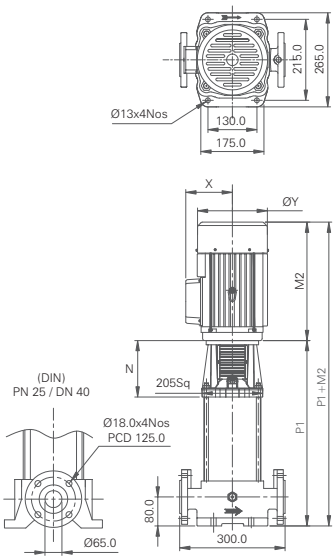

KIVC (ROUND FLANGE)

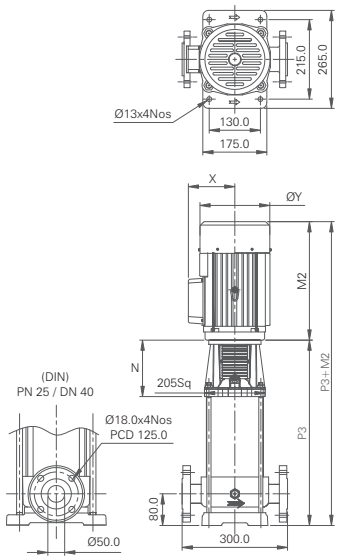

KIVS & N (ROUND FLANGE)

Nominal Flow	20 m³/h
Model	KIV-20
Pipe Size	2"x2"

DIMENSIONAL DATA & DRAWINGS

Model	Power		DIMENSIONS IN mm (Approx.)								APPROX.WEIGHT IN Kg			
			P1	P3	M2		X		ØY	Z	PUMP		MOTOR	
	kW	HP	KIVC (R)	KIVS&N (R)	1Ph	3Ph	1Ph	3Ph			KIVC (R)	KIVS&N (R)	1Ph	3Ph
KIV-C20/01R-T	1.1	1.5	348	343	284	265	141	120	160	173	38	33	13.5	13
KIV-C20/02R-T	2.2	3	407	402	315	311	144	131	176	187	39	34	20	17.5
KIV-C20/03R-T	4	5.5	455	447	-	350	-	135	187	190	40	35	-	27.5
KIV-C20/04R-T	5.5	7.5	529	521	-	385	-	205	257	216	45	40	-	49
KIV-C20/05R-T	5.5	7.5	574	566	-	385	-	205	257	216	46	41	-	49
KIV-C20/06R-T	7.5	10	619	611	-	424	-	205	257	216	47	42	-	50.5
KIV-C20/07R-T	7.5	10	664	656	-	424	-	205	257	216	48	43	-	50.5
KIV-C20/08R-T	11	15	798	790	-	500.5	-	261	314	305	67	62	-	107
KIV-C20/10R-T	11	15	932	924	-	500.5	-	261	314	305	69	64	-	107
KIV-C20/12R-T	15	20	1066	1058	-	500.5	-	261	314	305	71	66	-	117
KIV-C20/14R-T	15	20	1200	1192	-	500.5	-	261	314	305	73	68	-	117
KIV-C20/17R-T	18.5	25	1334	1326	-	500.5	-	261	314	305	76	71	-	134

Letter "R" stands for Round Flange and it will be replaced with "L" and "B" for Oval Flange and PJE connection.

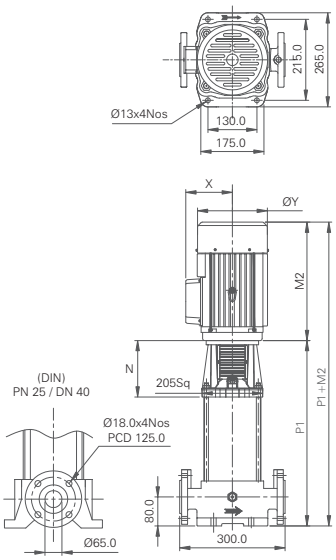

KIVC (ROUND FLANGE)

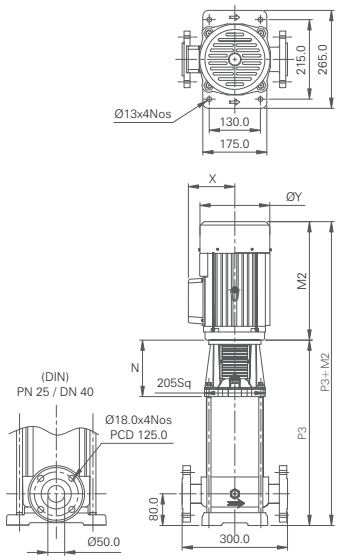

KIVS & N (ROUND FLANGE)

The Given details / drawings / specifications are subject to change without prior notice.

Nominal Flow	32 m³/h
Model	KIV-32
Pipe Size	2½"x2½"

DIMENSIONAL DATA & DRAWINGS

Model	Power		DIMENSIONS IN mm (Approx.)							APPROX.WEIGHT IN Kg			
			P1	M2		X		ØY	Z	PUMP		MOTOR	
	kW	HP		1Ph	3Ph	1Ph	3Ph			KIVC (R)	KIVS&N (P)	1Ph	3Ph
KIV-C32/01AR-T	1.5	2	510	294	295	128	128	187	201	59	64	16.5	15
KIV-C32/01R-T	2.2	3	510	320	305	136	136	187	201	59	64	20	17.5
KIV-C32/02AAR-T	3	4	580	-	320	-	136	187	201	62	67	-	24.5
KIV-C32/02AR-T	4	5.5	580	-	354	-	136	187	201	62	67	-	27.5
KIV-C32/02R-T	4	5.5	580	-	354	-	136	187	201	62	67	-	27.5
KIV-C32/03AAR-T	5.5	7.5	650	-	385	-	204	257	201	64	69	-	49
KIV-C32/03R-T	5.5	7.5	650	-	385	-	204	257	201	64	69	-	48
KIV-C32/04AAR-T	7.5	10	720	-	424	-	204	257	201	67	72	-	50.5
KIV-C32/04R-T	7.5	10	720	-	424	-	204	257	201	67	72	-	50.5
KIV-C32/05AAR-T	11	15	895	-	495	-	223	312	305	83	88	-	107
KIV-C32/05R-T	11	15	895	-	495	-	223	312	305	83	88	-	107
KIV-C32/06AAR-T	11	15	965	-	495	-	223	312	305	86	91	-	107
KIV-C32/06R-T	11	15	965	-	495	-	223	312	305	86	91	-	107
KIV-C32/07AAR-T	15	20	1035	-	495	-	223	312	305	89	94	-	117
KIV-C32/07R-T	15	20	1035	-	495	-	223	312	305	89	94	-	117
KIV-C32/08AAR-T	15	20	1105	-	495	-	223	312	305	92	97	-	117
KIV-C32/08R-T	15	20	1105	-	495	-	223	312	305	92	97	-	117
KIV-C32/09AAR-T	18.5	25	1175	-	495	-	223	312	305	95	100	-	134
KIV-C32/09R-T	18.5	25	1175	-	495	-	223	312	305	95	100	-	134
KIV-C32/10AAR-T	18.5	25	1245	-	495	-	223	312	305	98	103	-	134
KIV-C32/10R-T	18.5	25	1245	-	495	-	223	312	305	98	103	-	134
KIV-C32/11AAR-T	22	30	1315	-	630	-	271	SQ 340	305	101	106	-	180
KIV-C32/11R-T	22	30	1315	-	630	-	271	Sq340	305	101	106	-	180
KIV-C32/12AAR-T	22	30	1385	-	630	-	271	Sq340	305	104	109	-	180
KIV-C32/12R-T	22	30	1385	-	630	-	271	Sq340	305	104	109	-	180
KIV-C32/13AA	30	40	1455	-	630	-	271	Sq340	305	108	113	-	242
KIV-C32/13	30	40	1455	-	630	-	271	Sq340	305	108	113	-	242
KIV-C32/14AA	30	40	1575	-	630	-	271	Sq340	305	111	116	-	242
KIV-C32/14R-T	30	40	1575	-	630	-	271	Sq340	305	111	116	-	242

Letter "R" stands for Round Flange and it will be replaced with "L" and "B" for Oval Flange and PJE connection.

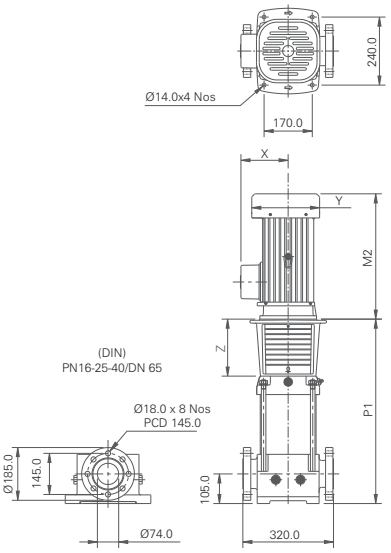

KIVC (ROUND FLANGE)

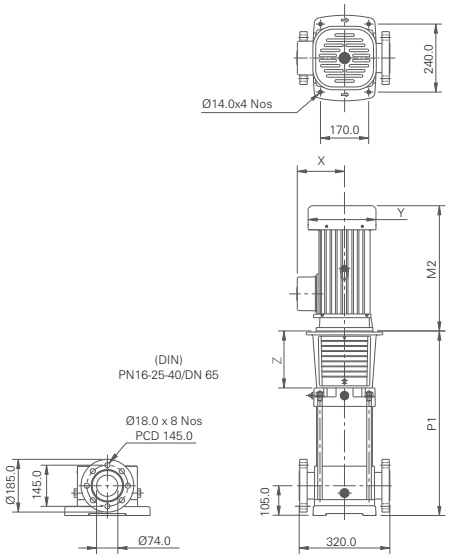

KIVS & N (ROUND FLANGE)

Nominal Flow	44 m³/h
Model	KIV-44
Pipe Size	3"x3"

DIMENSIONAL DATA & DRAWINGS

Model	Power		DIMENSIONS IN mm (Approx.)							ØD	APPROX.WEIGHT IN Kg			
			P	M		X		ØY	Z		PUMP		MOTOR	
	kW	HP		1Ph	3Ph	1Ph	3Ph				KIVC (R)	KIVS&N (R)	1Ph	3Ph
KIV-C44/01AR-T	3	4	564	340	320	-	128	185	201	270	65.00	62.00	23.00	21.50
KIV-C44/01R-T	4	5.5	564	-	354	-	136	187	201	270	65.00	62.00	-	26.00
KIV-C44/02AAR-T	5.5	7.5	644	-	385	-	204	257	201	270	69.00	66.00	-	41.30
KIV-C44/02R-T	7.5	10	644	-	424	-	204	257	201	270	69.00	66.00	-	47.60
KIV-C44/03AAR-T	11	15	828	-	495	-	223	312	305	350	86.00	83.00	-	110.00
KIV-C44/03R-T	11	15	828	-	495	-	223	312	305	350	86.00	83.00	-	110.00
KIV-C44/04AAR-T	15	20	908	-	495	-	223	312	305	350	90.00	87.00	-	120.20
KIV-C44/04R-T	15	20	908	-	495	-	223	312	305	350	90.00	87.00	-	120.20
KIV-C44/05AAR-T	18.5	25	988	-	495	-	223	312	305	350	94.00	91.00	-	131.50
KIV-C44/05R-T	18.5	25	988	-	495	-	223	312	305	350	94.00	91.00	-	131.50
KIV-C44/06AAR-T	22	30	1068	-	630	-	271	SQ340	305	350	99.00	96.00	-	172.00
KIV-C44/06R-T	22	30	1068	-	630	-	271	SQ340	305	350	99.00	96.00	-	172.00
KIV-C44/07AAR-T	30	40	1148	-	630	-	271	SQ340	305	400	107.00	104.00	-	188.00
KIV-C44/07R-T	30	40	1148	-	630	-	271	SQ340	305	400	107.00	104.00	-	188.00
KIV-C44/08AAR-T	30	40	1228	-	630	-	271	SQ340	305	400	111.00	108.00	-	188.00
KIV-C44/08R-T	30	40	1228	-	630	-	271	SQ340	305	400	111.00	108.00	-	188.00
KIV-C44/09AAR-T	30	40	1308	-	630	-	271	SQ340	305	400	115.00	112.00	-	188.00
KIV-C44/09R-T	37	50	1308	-	650	-	276	395	305	400	117.00	114.00	-	246.00
KIV-C44/10AAR-T	37	50	1388	-	650	-	276	395	305	400	121.00	118.00	-	246.00
KIV-C44/10R-T	37	50	1388	-	650	-	276	395	305	400	121.00	118.00	-	246.00
KIV-C44/11AAR-T	45	60	1468	-	695	-	297	435	305	450	125.00	122.00	-	365.00
KIV-C44/11R-T	45	60	1468	-	695	-	297	435	305	450	125.00	122.00	-	365.00
KIV-C44/12AAR-T	45	60	1548	-	695	-	297	435	305	450	129.00	126.00	-	365.00
KIV-C44/12R-T	45	60	1548	-	695	-	297	435	305	450	129.00	126.00	-	365.00
KIV-C44/13AAR-T	45	60	1628	-	695	-	297	435	305	450	133.00	130.00	-	365.00

Letter "R" stands for Round Flange and it will be replaced with "L" and "B" for Oval Flange and PJE connection.

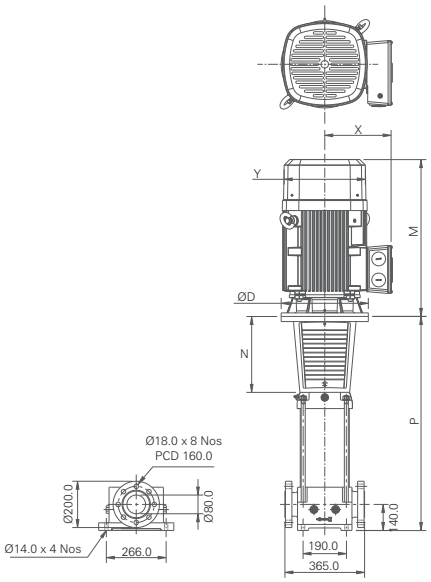

KIVC (ROUND FLANGE)

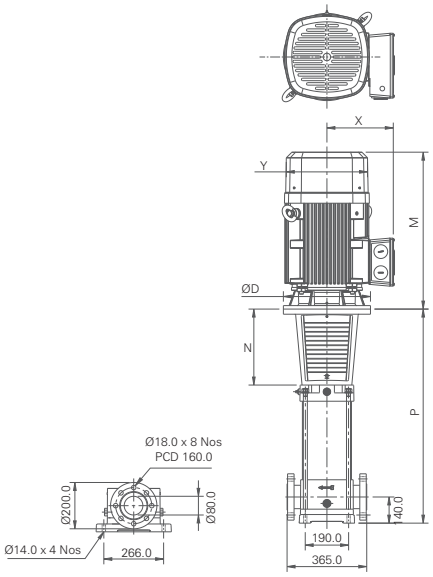

KIVS & N (ROUND FLANGE)

The Given details / drawings / specifications are subject to change without prior notice.

Nominal Flow	66 m³/h
Model	KIV-66
Pipe Size	4"x4"

DIMENSIONAL DATA & DRAWINGS

Model	Power		DIMENSIONS IN mm (Approx.)							APPROX.WEIGHT IN Kg			
			P	M		X		ØY	Z	PUMP		MOTOR	
	kW	HP		1Ph	3Ph	1Ph	3Ph			KIVC (R)	KIVS&N (R)	1Ph	3Ph
KIV-C66/01AR-T	4	5.5	564	-	354	-	136	187	201	72.00	69.00	-	26.00
KIV-C66/01R-T	5.5	7.5	564	-	385	-	204	257	201	72.00	69.00	-	41.30
KIV-C66/02AAR-T	7.5	10	644	-	424	-	204	257	201	76.00	73.00	-	47.60
KIV-C66/02AR-T	11	15	644	-	495	-	223	312	305	89.00	86.00	-	110.00
KIV-C66/02R-T	11	15	644	-	495	-	223	312	305	89.00	86.00	-	110.00
KIV-C66/03AAR-T	15	20	828	-	495	-	223	312	305	93.00	90.00	-	120.20
KIV-C66/03AR-T	15	20	828	-	495	-	223	312	305	93.00	90.00	-	120.20
KIV-C66/03R-T	18.5	25	828	-	495	-	223	312	305	93.00	90.00	-	131.50
KIV-C66/04AAR-T	18.5	25	908	-	495	-	223	312	305	97.00	93.00	-	131.50
KIV-C66/04AR-T	22	30	908	-	630	-	271	SQ340	305	98.00	95.00	-	172.00
KIV-C66/04R-T	22	30	908	-	630	-	271	SQ340	305	98.00	95.00	-	172.00
KIV-C66/05AAR-T	30	40	988	-	630	-	271	SQ340	305	106.00	103.00	-	188.00
KIV-C66/05AR-T	30	40	988	-	630	-	271	SQ340	305	106.00	103.00	-	188.00
KIV-C66/05R-T	30	40	988	-	630	-	271	SQ340	305	106.00	103.00	-	188.00
KIV-C66/06AAR-T	30	40	1068	-	630	-	271	SQ340	305	110.00	107.00	-	188.00
KIV-C66/06AR-T	37	50	1068	-	650	-	276	395	305	112.00	109.00	-	246.00
KIV-C66/06R-T	37	50	1068	-	650	-	276	395	305	112.00	109.00	-	246.00
KIV-C66/07AAR-T	37	50	1148	-	650	-	276	395	305	116.00	113.00	-	246.00
KIV-C66/07AR-T	37	50	1148	-	650	-	276	395	305	116.00	113.00	-	246.00
KIV-C66/07R-T	45	60	1148	-	695	-	297	435	305	116.00	113.00	-	365.00
KIV-C66/08AAR-T	45	60	1228	-	695	-	297	435	305	120.00	117.00	-	365.00
KIV-C66/08AR-T	45	60	1228	-	695	-	297	435	305	120.00	117.00	-	365.00

Letter "R" stands for Round Flange and it will be replaced with "L" and "B" for Oval Flange and PJE connection.

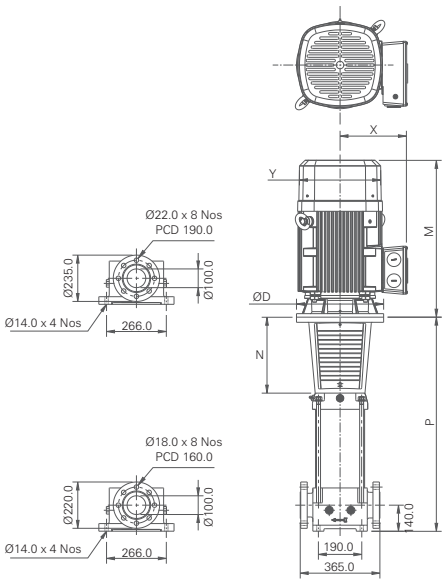

KIVC (ROUND FLANGE)

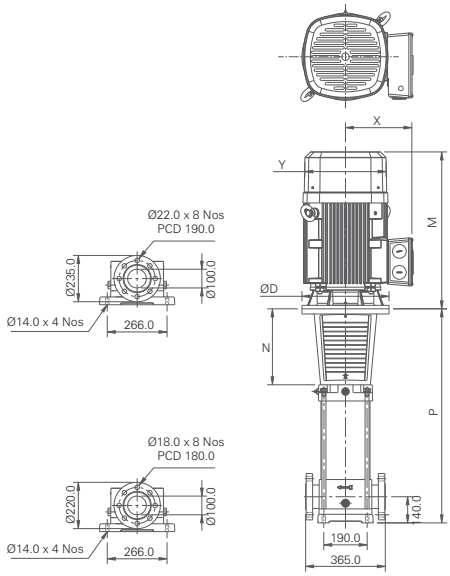

KIVS & N (ROUND FLANGE)

Nominal Flow	90 m³/h
Model	KIV-90
Pipe Size	4"x4"

DIMENSIONAL DATA & DRAWINGS

Model	Power		DIMENSIONS IN mm (Approx.)							APPROX.WEIGHT IN Kg			
			P	M		X		ØY	Z	PUMP		MOTOR	
	kW	HP		1Ph	3Ph	1Ph	3Ph			KIVC (R)	KIVS&N (R)	1Ph	3Ph
KIV-C90/01AR-T	5.5	7.5	5.5	7.5	572	-	385	257	201	68.50	66.50	-	41.30
KIV-C90/01R-T	7.5	10	7.5	10	572	-	424	257	201	68.50	66.50	-	47.60
KIV-C90/02AR-T	11	15	11	15	768	-	495	312	305	84.90	82.90	-	110.00
KIV-C90/02R-T	15	20	15	20	768	-	495	312	305	84.90	82.90	-	120.20
KIV-C90/03AR-T	18.5	25	18.5	25	860	-	495	312	305	90.90	88.90	-	131.50
KIV-C90/03R-T	22	30	22	30	860	-	630	SQ340	305	90.90	88.90	-	172.00
KIV-C90/04AAR-T	30	40	30	40	952	-	630	SQ340	305	99.00	97.00	-	188.00
KIV-C90/04R-T	30	40	30	40	952	-	650	SQ340	305	99.00	97.00	-	188.00
KIV-C90/05AAR-T	37	50	37	50	1044	-	650	395	305	113.30	111.30	-	246.00
KIV-C90/05R-T	37	50	37	50	1044	-	650	395	305	113.30	111.30	-	246.00
KIV-C90/06AAR-T	45	60	45	60	1136	-	695	435	305	118.30	116.30	-	365.00
KIV-C90/06R-T	45	60	45	60	1136	-	695	435	305	118.30	116.30	-	365.00

Letter "R" stands for Round Flange and it will be replaced with "L" and "B" for Oval Flange and PJE connection.

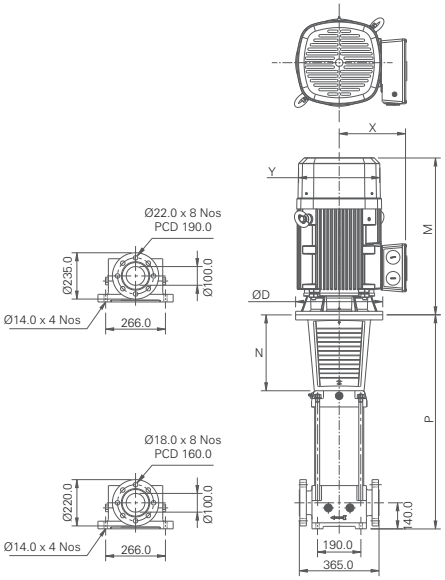

KIVC (ROUND FLANGE)

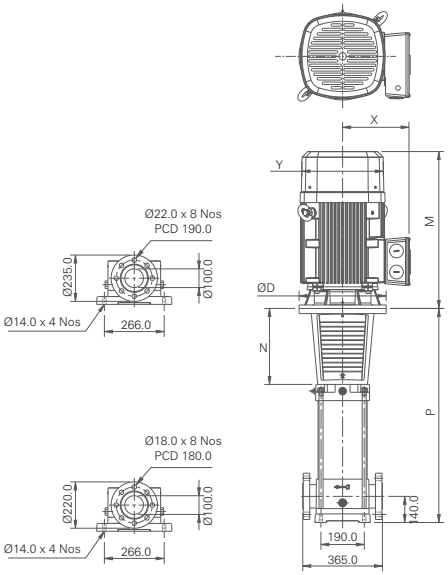

KIVS & N (ROUND FLANGE)

The Given details / drawings / specifications are subject to change without prior notice.

Nominal Flow	120 m³/h
Model	KIV-120
Pipe Size	5"x5"

DIMENSIONAL DATA & DRAWINGS

PUMP MODEL	POWER		DIMENSIONS (mm)						NET WEIGHT (kg)		MOTOR FRAME SIZE
	kW	HP	L1	L2	X	Y	Z	ØD	PUMP KIVC (R) / KIVS & N (R)	MOTOR	
KIV-C120/01R-T	11	15	847	495	223	314	305	350	125	122	160M
KIV-C120/02AR-T	18.5	25	1001	495	223	314	305	350	129	151	160L
KIV-C120/02R-T	22	30	1001	630	271	340	305	350	129	180	180M
KIV-C120/03R-T	30	40	1155	630	271	340	305	400	135	242	200L
KIV-C120/04AR-T	37	50	1309	650	276	395	305	400	144	257	
KIV-C120/04R-T	45	60	1309	695	297	435	305	450	144	320	225M
KIV-C120/05AR-T	45	60	1463	695	297	435	305	450	171	320	
KIV-C120/05R-T	55	75	1488	763	367	484	330	550	171	370	250M
KIV-C120/06AR-T	55	75	1640	763	367	484	330	550	190	510	
KIV-C120/06R-T	75	100	1794	402	402	547	330	550	215	510	280S

Letter "R" stands for Round Flange and it will be replaced with "L" and "B" for Oval Flange and PJE connection.
Note : Flange mounted motor (B5) - Above 9.3kW

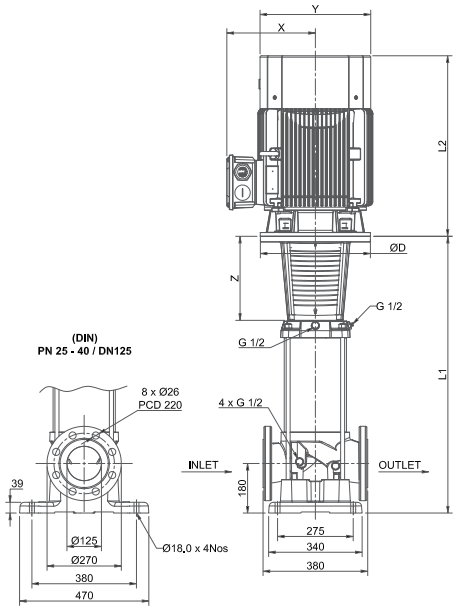

Nominal Flow	150 m³/h
Model	KIV-150
Pipe Size	5"x5"

DIMENSIONAL DATA & DRAWINGS

PUMP MODEL	POWER		DIMENSIONS (mm)						NET WEIGHT (kg)		MOTOR FRAME SIZE
	kW	HP	L1	L2	X	Y	Z	ØD	PUMP KIVC (R) / KIVS & N (R)	MOTOR	
KIV-C150/01AR-T	11	15	847	495	223	314	305	350	125	122	160M
KIV-C150/01R-T	15	20	847	495	223	314	305	350	125	131	
KIV-C150/02AR-T	22	30	1003	630	271	Sq 340	305	350	129	180	180M
KIV-C150/02R-T	30	40	1003	630	271	Sq 340	305	400	129	242	200L
KIV-C150/03BR-T	30	40	1159	630	271	Sq 340	305	400	135	242	
KIV-C150/03R-T	37	50	1159	650	276	395	305	400	135	258	
KIV-C150/04AR-T	45	60	1313	695	297	435	305	450	144	320	225M
KIV-C150/05BR-T	55	75	1494	763	367	484	330	550	171	370	250M
KIV-C150/05R-T	75	100	1494	835	402	547	330	550	171	510	280S
KIV-C150/06R-T	75	100	1650	835	402	547	330	550	191	510	

Letter "R" stands for Round Flange and it will be replaced with "L" and "B" for Oval Flange and PJE connection.
Note : Flange mounted motor (B5) - Above 9.3kW

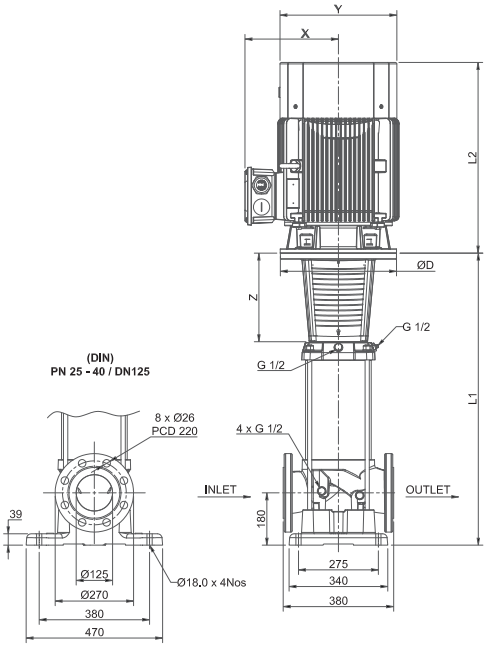

The Given details / drawings / specifications are subject to change without prior notice.

Nominal Flow	200 m³/h
Model	KIV-200
Pipe Size	6"x6"

DIMENSIONAL DATA & DRAWINGS

PUMP MODEL	POWER		DIMENSIONS (mm)						NET WEIGHT (kg)		MOTOR FRAME SIZE
	kW	HP	L1	L2	X	Y	Z	ØD	PUMP KIVC (R) / KIVS & N (R)	MOTOR	
KIV-C200/01AR-T	15	20	912	495	223	314	320	350	173	131	160M
KIV-C200/01R-T	18.5	25	912	495	223	314	320	350	173	151	160L
KIV-C200/02BR-T	30	40	1091	630	271	Sq 340	320	400	191	242	200L
KIV-C200/02AR-T	37	50	1091	650	276	395	320	450	191	258	
KIV-C200/02R-T	45	60	1091	695	297	435	320	550	191	320	225M
KIV-C200/03BR-T	55	75	1270	763	367	484	325	550	219	370	250M
KIV-C200/03AR-T	55	75	1270	763	367	484	325	550	219	370	
KIV-C200/03R-T	75	100	1270	835	402	547	325	550	219	510	280S
KIV-C200/04BR-T	75	100	1448	835	402	547	325	550	244	510	
KIV-C200/04AR-T	75	100	1448	835	402	547	325	550	244	510	
KIV-C200/04R-T	75	100	1448	835	402	547	325	550	244	510	
KIV-C200/05BR-T	90	120	1626	1040	426	543	325	550	275	592	280M
KIV-C200/05AR-T	90	120	1626	1040	426	543	325	550	275	592	
KIV-C200/05R-T	90	120	1626	1040	426	543	325	550	275	592	
KIV-C200/06BR-T	110	150	1805	1155	460	621	325	550	311	750	315S
KIV-C200/06AR-T	110	150	1805	1155	460	621	325	550	311	750	
KIV-C200/06R-T	110	150	1805	1155	460	621	325	550	311	750	

Letter "R" stands for Round Flange and it will be replaced with "L" and "B" for Oval Flange and PJE connection.

Note : Flange mounted motor (B5) - Above 9.3kW

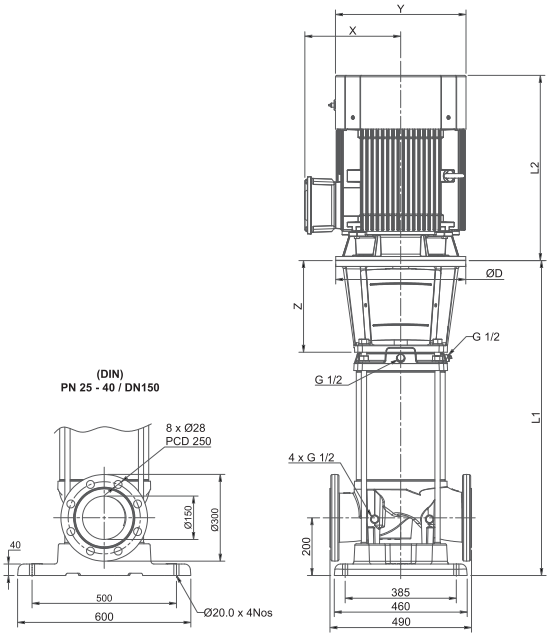

CONVERSION CHART

Flow Rate

litre per second l/s	litre per minute l/min	cubic meter per hour m^3/h	cubic foot per hour ft^3/h	cubic foot per minute ft^3/min	Imp.gallon per minute Imp.gal./min	US gallon per minute Us gal./min	Us barrel per day Is barrel/d (Petroleum)
1	60	3.6	127.133	2.1189	13.2	15.85	543.439
0.017	1	0.06	2.1189	0.0353	0.22	0.264	9.057
0.278	16.667	1	35.3147	0.5886	3.666	4.403	150.955
0.008	0.472	0.0283	1	0.0167	0.104	0.125	4.275
0.472	28.317	1.6990	60	1	6.229	7.480	256.475
0.076	4.546	0.2728	9.6326	0.1605	1	1.201	41.175
0.063	3.785	0.2271	8.0209	0.1337	0.833	1	34.286
0.002	0.110	0.0066	0.2339	0.0039	0.024	0.029	1

Liquid

litre per second l/s	litre per minute l/min	cubic meter per hour m^3/h	cubic foot per hour ft^3/h	cubic foot per minute ft^3/min	Imp.gallon per minute Imp.gal./min
1	60	3.6	127.133	2.1189	13.2
0.017	1	0.06	2.1189	0.0353	0.22
0.278	16.667	1	35.3147	0.5886	3.666
0.008	0.472	0.0283	1	0.0167	0.104
0.472	28.317	1.6990	60	1	6.229
0.076	4.546	0.2728	9.6326	0.1605	1
0.063	3.785	0.2271	8.0209	0.1337	0.833
0.002	0.110	0.0066	0.2339	0.0039	0.024

Liquid Head and Pressure

newton per square meter N/m^2 (Pa)	kilo pascal kPa	bar bar	kilogram force per square centimeter Kgf/cm2	pound force per square inch psi	foot for water ft H_20	meter of water m H_20	millimeter of mercury mm Hg	inch of mercury in Hg
1	0.001	1×10^{-5}	1.02×10^{-5}	1.45×10^{-4}	3.35×10^{-4}	1.02×10^{-4}	0.0075	2.95×10^{-4}
1000	1	0.01	0.0102	0.145	0.335	0.102	7.5	0.295
1×10^{-5}	100	1	1.02	14.5	33.52	10.2	750.1	29.53
98,067	98.07	0.981	1	14.22	32.81	10	735.6	28.96
6895	6.895	0.069	0.0703	1	2.31	0.703	51.72	2.036
2984	2.984	0.03	0.0305	0.433	1	0.305	22.42	0.882
9789	9.789	0.098	0.1	1.42	3.28	1	73.42	2.891
133.3	0.133	0.0013	0.0014	0.019	0.045	0.014	1	0.039
3386	3.386	0.0338	0.0345	0.491	1.133	0.0345	25.4	1

CONVERSION CHART

Liquid

millimeter mm	centimeter cm	meter m	inch in	foot ft	yard yd
1	0.1	0.001	0.0394	0.0033	0.0011
10	1	0.01	0.3937	0.0328	0.0109
1000	100	1	39.3701	3.2808	1.0936
25.4	2.54	0.0254	1	0.0833	0.0278
304.8	30.48	0.3048	12	1	0.3333
914.4	91.44	0.9144	36	3	1

1 Kilometer = 1000 metres = 0.62137 miles 1 mile = 1609.37 metres = - 1.60934 kilometers

Mass

kilogram kg	pound lb	hundred weight (cwt)	tonne t	ton long tn	short ton sh tn
1	2.205	0.0197	0.001	9.84×10^{-4}	0.0011
0.454	1	0.0089	4.54×10^{-4}	4.46×10^{-4}	5.0×10^{-4}
50.802	112	1	0.0508	0.05	0.056
1000	2204.6	19.684	1	0.9842	1.1023
1016	2240	20	1.0161	1	1.102
907.2	2000	17.857	0.9072	0.8929	1

1 Kilometer = 1000 metres = 0.62137 miles 1 mile = 1609.37 metres = - 1.60934 kilometers

Temperature

To Convert From	To	Use Formula
Temperature Celsius, tc	Temperature Kelvin, tk	K = tc + 273.15
Temperature Fahrenheit, tf	Temperature Kelvin, tk	K = (tF + 459.67 / 1.8)
Temperature Celsius, tc	Temperature Fahrenheit, tf	F = 1.8 tc + 32
Temperature Fahrenheit, tf	Temperature Celsius, tc	C = (tF - 32) / 1.8
Temperature Kelvin, tk	Temperature Celsius, tc	C = tk - 273.15
Temperature Kelvin, tk	Temperature Fahrenheit, tf	F = 1.8tk - 459.67

YOU ARE LOOKING AT WHAT THE FUTURE IS COMING TO!

Genvik presents a stable of products for a new generation of customers and applications

GENVIK

WE MAKE IT BETTER

ACNAL INDUSTRIES PRIVATE LIMITED
No: 43, Sundareshwara Nagar, Nalla Thanner Thottam, Sivananda Mills Road
VilanKuruchi, Coimbatore - 641 035.
Phone : +91 8489422000, E-Mail : sales@genvikpumps.com Web : www.genvikpumps.com

KE-23CMP/C53