GENVIK
WE MAKE IT BETTER

WASTE WATER SUBMERSIBLE PUMPS - **50 Hz**

MARSHALLING THE POWER OF TECHNOLOGY TO PROVIDE COST EFFECTIVE PUMPING SOLUTIONS

Genvik is one of the emerging leaders in the world with the capability and the resources to provide pumping solutions that are not only cost effective but contributes to better productivity. As a technology oriented company Genvik has made major investments to stay on the cutting edge of pump manufacture. While the focus is on industrial pumps, Genvik has also developed pumping systems for diverse applications.

Genvik pumps are manufactured at ISO 9001&14001 facilities, equipped with state of art testing equipments and highly sophisticated machinery. Design and manufacture are carried out under digital environment for zero defect product turn out.

Backed by strong customer service and a willingness to listen to customer perceptions and needs, Genvik is a name to reckon with in the world of pumps.

VISION

To always stay on the cutting edge of pump and other accessories manufacture, with special emphasis on industrial pumps, to ensure that customers across the globe enjoy the benefits of our efforts to provide world class products.

MISSION

By embracing technology coupled with innovative thinking, we will meet customer expectations for high performance products with affordability as a key factor. We seek to do it by staying open to the latest developments in the field, by being proactive and optimistic and through teamwork, resourcefulness and commitment.

C O N T E N T S

Page No.

Installation Types 4

Product Identification Code 4

SUBMERSIBLE PUMPS - Vortex Impeller 5

KGB Series Performance Curves 6

KGB Series Technical Features & Dimension Drawings 9-11

KGA-4 Series Performance curves & Dimension Drawings 12

KG Series Technical Features 17

KG Series 24

KGT Series 26

KAG Series 34

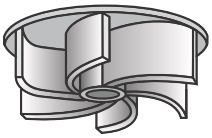

Vortex:

vortex impeller suitable for lifting of sewage liquids, civil waste and industrial water containing solids and viscous materials, heavy muds raw or fermented sludge.
applications: urban sewage plants, lifting water plants.
High head - High performance - wide free passage.

Multi-Channel:

closed multi-channel impeller resistant to wear and suitable for lifting of rain water, mixed liquids and waste water without gas and solids and fibrous materials.
applications: civil and industrial applications, sewage lifting plants, treatement water plants.

Mixers

Propeller: three-blades propeller for mixing and suspension of all types of liquids and sludge.
Applications: mixing up and handling of liquids with suspended solids, mixtures of high viscosity liquids, chemical industry

Single-Channel:

no-clogging single channel impeller with large free passages. High hydraulic efficiency , resistance to wear and low mechanical action on pumps liquid make this pump series particularly suitable for treatement of rain water, sewage water containing solids, fibrous and abrasive liquid, active and industrial sludge.
applications: sewage stations and industrial treatements plants

Cutting Device:

cutting device suitable to reduce into little pieces solids contained into liquids. this device permit the use of small pipes without risk of clogging. either the fixed part and the movable are built in a special stainless steel.
applications: food industry, textile and agricultural irrigation

Agitators:

the turbulence created by the agitator prevents the formation of incrustations on the surface of the water and remove any build-up deposited at the bottom
applications: wells and rainwater collection basins

CONTRUCTION MATERIALS	
• Pump housing	• Cast iron EN-GJI-250
• Motor housing	• Cast iron EN-GJI-250
• Impeller	• Cast iron EN-GJI-250
• Cover	• Cast iron EN-GJI-250
• Shaft	• Stainless steel X30 Cr13 (AISIi420)
• O-rings guarniture	• Nitrile
• Cable	• Neoprene
• Screws	• Stainless steel A2 AISI 304

APPLICATION LIMITS	
• Max. application temperature	• 40°C
• Service	• S1
• Max. startings per hour	• 20
• Max. immersion depth	• 20 m
• PH liquid	• 6 ÷ 12
• Liquid viscosity	• 1 mm^2/s
• Liquid density	• 1 Kg/dm^3
• Max. acustic pression	• <70dB

P1	max. motor input
P2	Motor nominal power
H	Head
Q	Flow
F	Spherical clearance

Installation Types

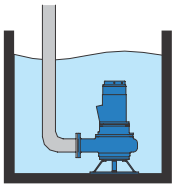

1 V
Fixed installation with low level coupling type V

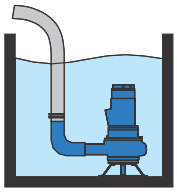

2 F
Movable installation with base stand and connection for rigid pipe

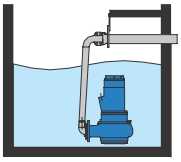

3 G
Movable installation for flexible pipe

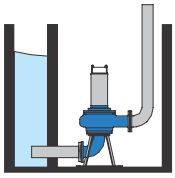

4 H
Fixed installation with HK system

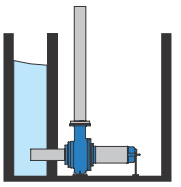

5 C
Dry pit vertical installation for pumps with cooling jacket

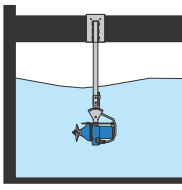

6 O
Dry pit horizontal installation for pumps with cooling jacket

11 T
Fixed installation for mixers with adjustable lifting device

12 P
Adjustable fixed installation with pole and winch

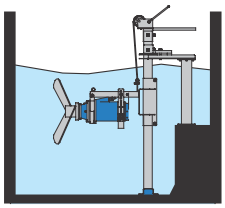

Product Identification Code

X XX- XX XXX- XX- XX X X

K - Genvik

SERIES NAME & IMPELLER TYPE
- GB - CUR VED BLADE VORTEX
- GT - GRINDER VORTEX
- KC - CLOSED MULTI CHANNEL
- MD / TP - MIXED WITH PROPELLER
- GA - STRAIGHT BLADE VORTEX
- MC - CLOSED SINGLE CHANNEL
- MA - OPEN SINGLE CHANNEL
- AG - AGITATOR VORTEX

kW / HP
- 50 hz : 03 =0.37,15 =1.5, 37 = 3.7, 450 = 45, A00 = 100 in kw
- 60 Hz - 05 = 0.5, 10 = 1.0, 30 = 3.0, 300 = 30, A00 = 100 in HP

OUTLET SIZE IN mm
- A = 25
- B = 32
- C = 40
- D = 50
- E = 65
- F = 80
- G = 100
- H = 125
- I = 150
- J = 200
- K = 250
- L = 300
- M = 350
- N = 400
- P = 450

PHASE / CONNECTION / STARTING METHOD
- 50 hz =M - 1Ph, Ms - 1 Ph with control panel with manual start, t - 3 PH / D.O.L, D - 3 PH / S.D
- 60 Hz = 3 = 1Ph, 3s-1 Ph with control panel with manual start, 4 = 3Ph / D.O.K, 6 = 3 Ph / S.D

NO.OF POLE / SPEED - APPLICABLE OTHER THAN 2 POLE DESIGN
- 50 hz = 4 = 4 Pole, 6 = 6 Pole, 8 = 8 Pole
- 60 Hz = F = 4 Pole, S = 6 Pole, E = 8 Pole

SPECIAL CHARACTER
- A- Reduced imp, AA - Further reduced, LH - low head
- AF- Automatic with float switch, HF - High Flow.

MOC			
	Pump Casing / Agitator	**Impeller**	**Motor housing**
C	C.I	C.I	CI
G	C.I	SS (304)	CI
U	SS (304)	SS (304)	CI
S	SS (304)	SS (304)	SS (304)
R	C.I	SS (316)	CI
M	SS (316)	SS (316)	CI
N	SS (316)	SS (316)	SS (316)

IMPELLER TYPE	
V - VORTEX	C - CLOSED SINGLE CHANNEL
L - CLOSED MULTI CHANNEL	S - OPEN SINGLE CHANNEL
D - OPEN / SEMI OPEN DOUBLE CHANNEL	P- MIXER PROPELLER
A - AXIAL FLOW	E - CLOSED DOUBLE CHANNEL
M - OPEN / SEMI OPEN MULTI CHANNEL	

Model Name & Description

50 Hz : KGB-CV26-ET, 2.6 kW,50 Hz , 3Ph, 415V, 2 pole Dol Sewage Submersible Pump
60 Hz : KGB-CV44-E4, 4.4 HP, 60 Hz , 3Ph, 440V, 2 pole Dol Sewage Submersible Pump

SUBMERSIBLE PUMPS - Vortex Impeller

KG Series
0.5 - 5.5 kW

Discharge size
1"1/2 - 2"1/2 DN 50-65

Technical Features

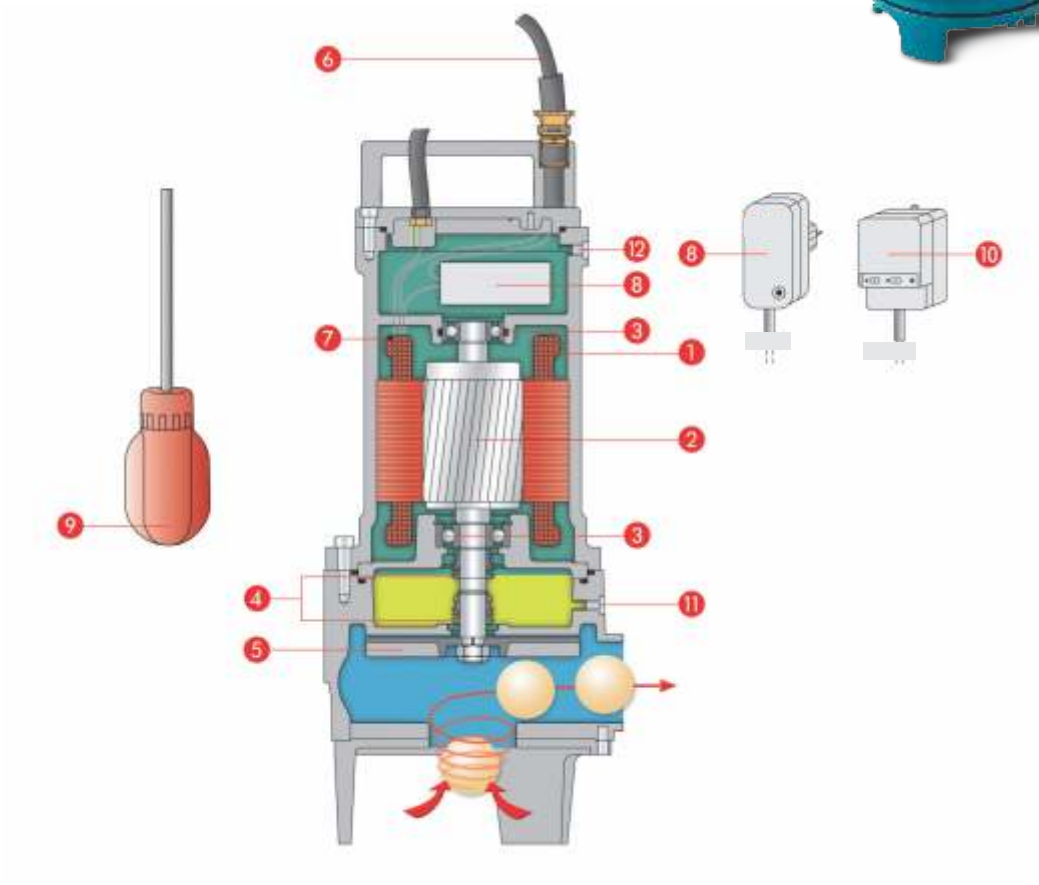

1. Fully submersible pressure tight electric motor Insulation class H. Protection degree IP 68 Three-phase 3x380/415V-50 Hz. Different voltage and frequency on request.
2. Shaft in stainless steel AISI 420
3. Bearings over-dimensioned long-life
4. Double mechanical seal in oil chamber + radial lipseal Water side: silicon carbide/silicon carbide Motor side: graphite/alumina
5. Impeller high head cast iron Vortex
6. Cable H07RNF
7. Thermal protection standard in the single phase execution
8. Plug with capacitor till 30.000 hours (external for pumps SN 7)
9. Float switch regulator
10. AET-AEM electrical gear for three-phase and single-phase execution
11. Oil inspection plug
12. Air plug hole for the motor watertightness control

Performance Curves

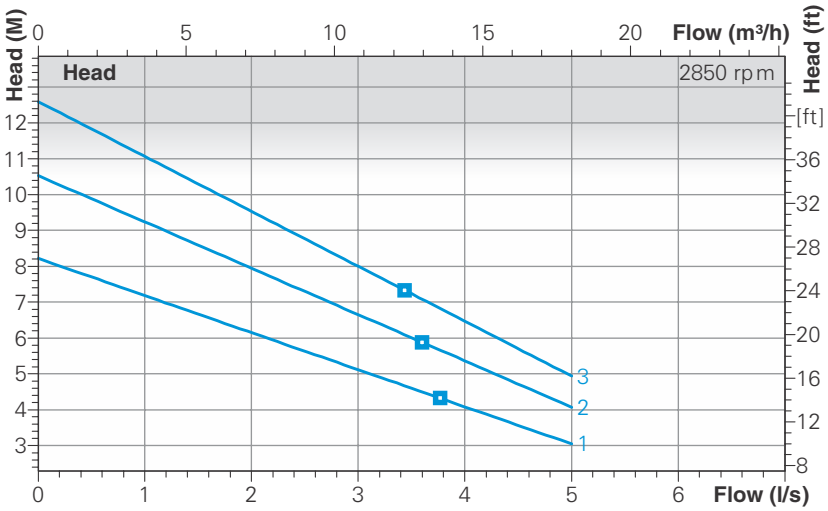

GENERAL FEATURES												PERFORMANCES							
SN	Model - Type	P1 kW	P2 kW	Volt	µF	Amp	rpm	DN	Ø mm	V	KG	l/sec	0	1	2	3	4	5	6
												m³/h	0	3,6	7,2	10,8	14,4	18	21,6
1	KGB - CV05 - CM(AF)	0.65	0.5	1x230	16	3	2850	1"1/2	36	40N	14	m	8	7,3	6,3	5,2	4,1	2,9	
1	KGB - CV05 - CT	0.65	0.5	3x400		1,2	2850	1"1/2	36	40N	14		8	7,3	6,3	5,2	4,1	2,9	
2	KGB - CV06 - CM(AF)	0.8	0.65	1x230	16	4	2850	1"1/2	36	40N	14		10,6	9,2	7,8	6,7	5,5	4	
2	KGB - CV06 - CT	0.8	0.65	3x400		1,5	2850	1"1/2	36	40N	14		10,6	9,2	7,8	6,7	5,5	4	
3	KGB - CV08 - CM(AF)-A	0.9	0.8	1x230	16	4,8	2850	1"1/2	36	40N	14		12,7	10,8	9,5	8,2	6,7	4,7	
3	KGB - CV08 - CT-A	0.9	0.8	3x400		2	2850	1"1/2	36	40N	14		12,7	10,8	9,5	8,2	6,7	4,7	

Dimension Drawings

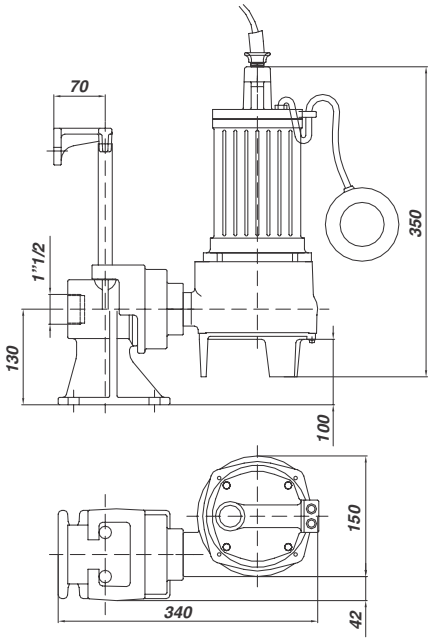

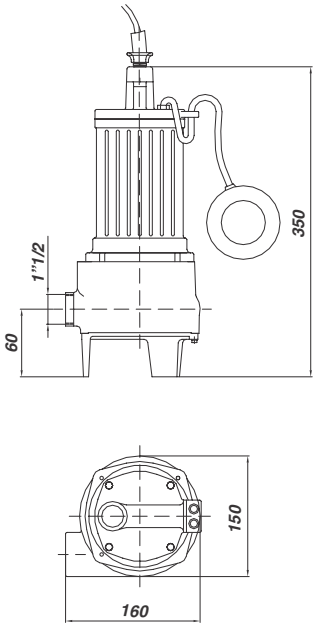

Installation Type

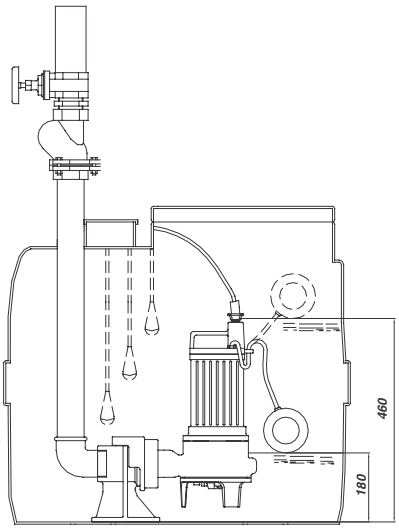

Performance Curves

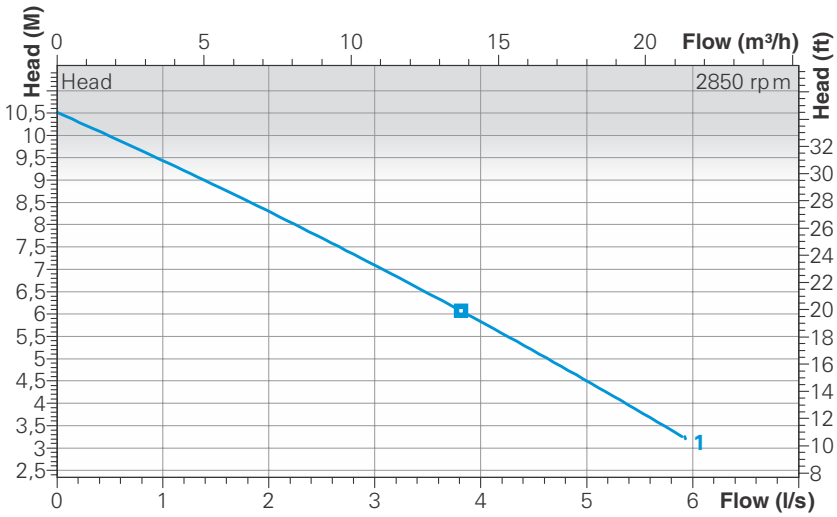

GENERAL FEATURES												PERFORMANCES								
SN	Model - Type	P1 kW	P2 kW	Volt	µF	Amp	rpm	DN	Ø mm	V	KG	l/sec	0	1	2	3	4	5	6	7
												m³/h	0	3,6	7,2	10,8	14,4	18	21,6	25,2
1	KGB - CV08 - CM(AF)	1.1	0.8	1x230	22	5	2850	1"1/2	36	40N	20	m	10,4	9,5	8,4	7,2	5,7	4,4	3,1	
1	KGB - CV08 - CT	1.1	0.8	3x400		2	2850	1"1/2	36	40N	20		10,4	9,5	8,4	7,2	5,7	4,4	3,1	

Dimension Drawings

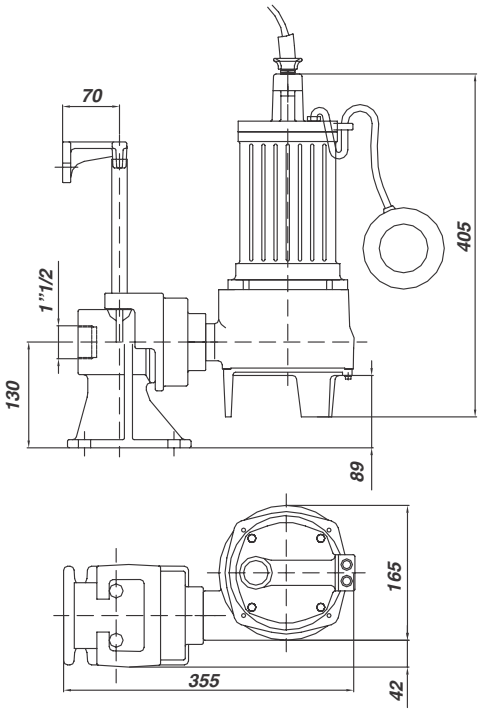

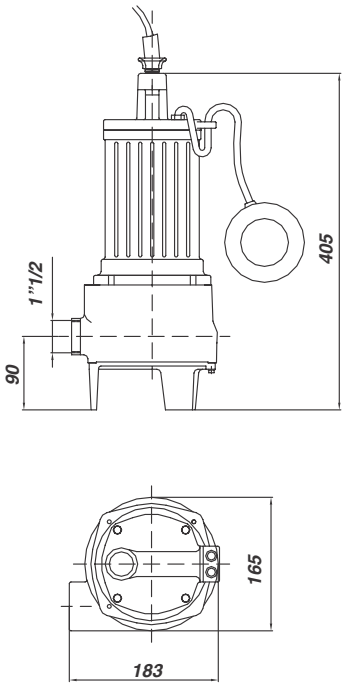

Installation Type

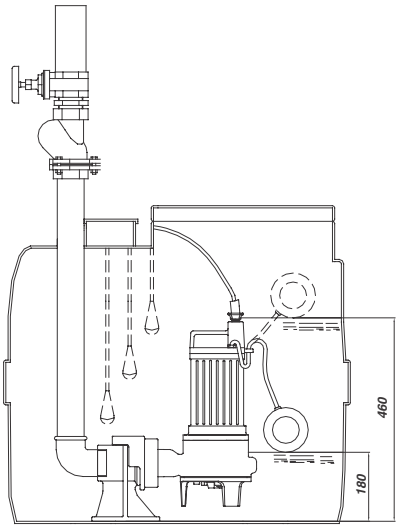

Performance Curves

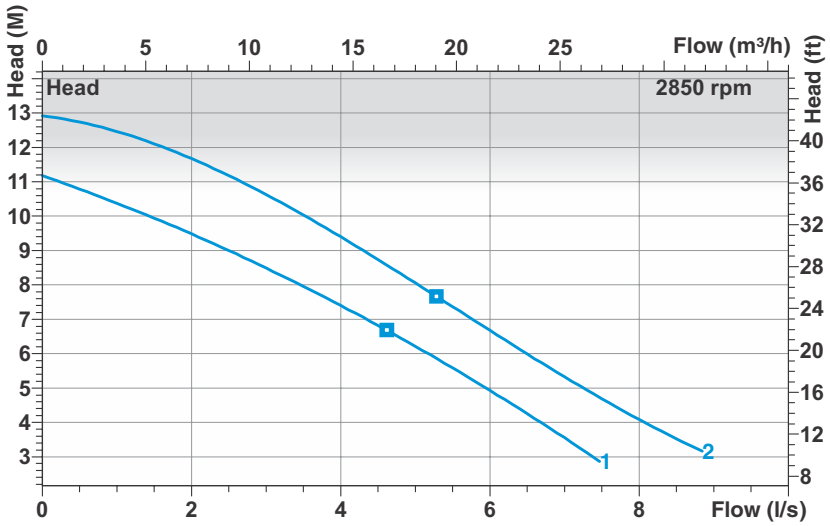

GENERAL FEATURES												PERFORMANCES										
SN	Model - Type	P1 kW	P2 kW	Volt	µF	Amp	rpm	DN	Ø mm	V	KG	l/sec	0	1	2	3	4	5	6	7	8	9
												m³/h	0	3,6	7,2	10,8	14,4	18	21,6	25,2	28,8	32,4
1	KGB-CV08-DM(AF)-A	1.1	0.8	1x230	22	5	2850	2”	45	50N	24	m	11,3	10,8	10,1	9	7,7	6,4	5,1	3,8		
1	KGB - CV08 - DT - A	1.1	0.8	3x400		2	2850	2”	45	50N	24		11,3	10,8	10,1	9	7,7	6,4	5,1	3,8		
2	KGB-CV12-DM(AF)-A	1.7	1.2	1x230	30	7,4	2850	2”	45	50N	24		13,3	12,9	12,1	11	9,8	8,5	7	5,7	4,4	3,3
2	KGB-CV12-DT-A	1.7	1.2	3x400		2,5	2850	2”	45	50N	24		13,3	12,9	12,1	11	9,8	8,5	7	5,7	4,4	3,3

Dimension Drawings

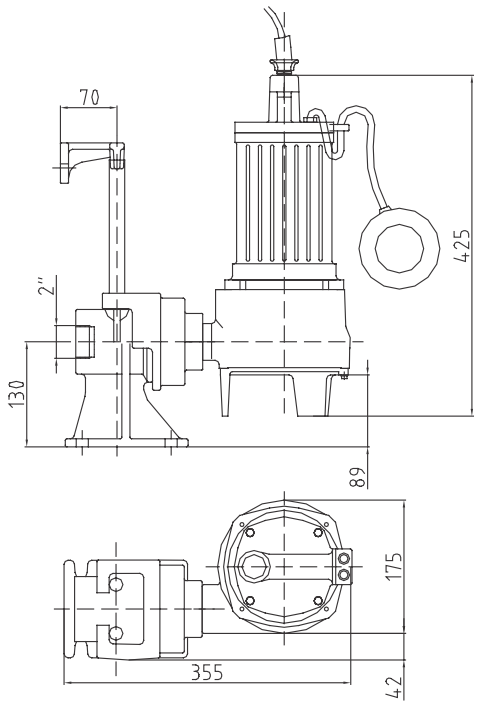

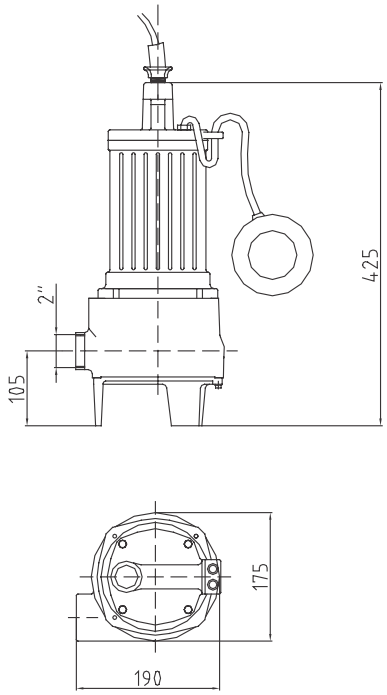

Installation Type

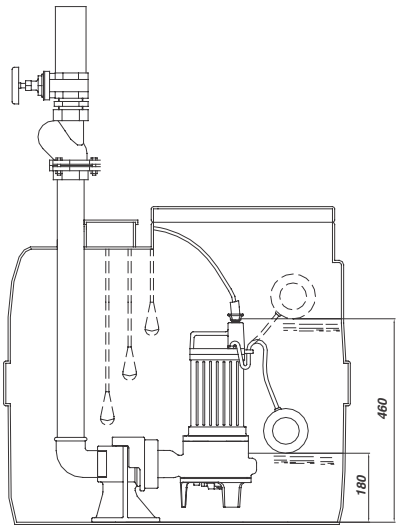

Technical Features

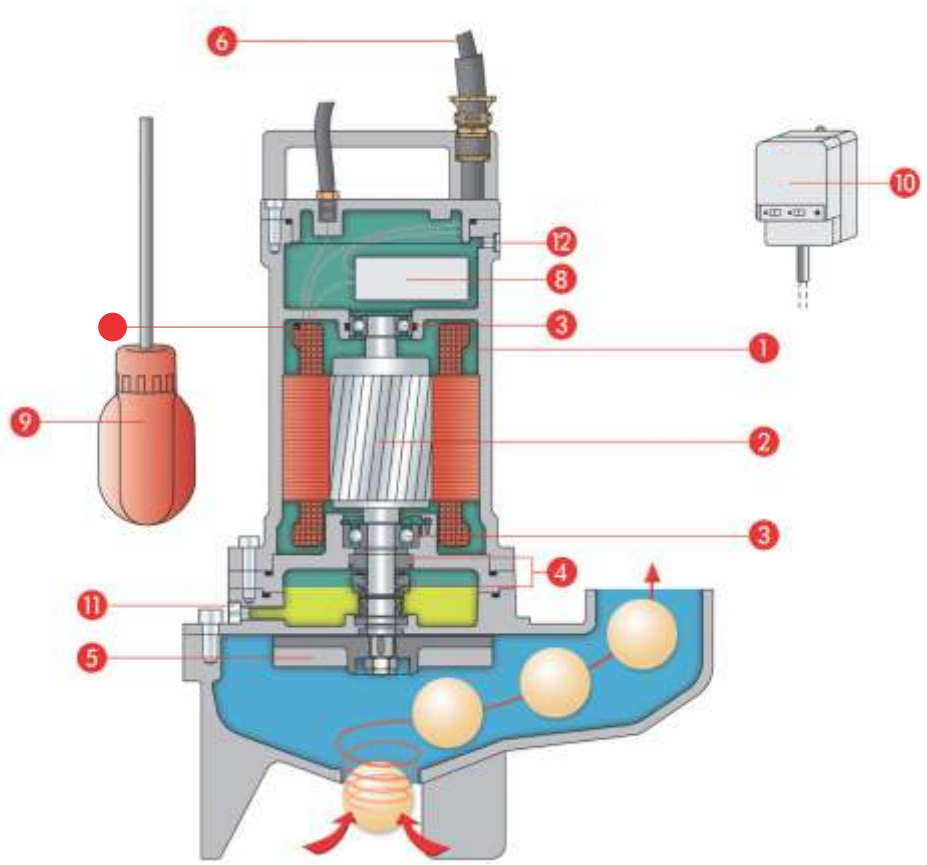

1. Fully submersible pressure tight electric motor
   Insulation class H. Protection degree IP 68
   Speed: 2850 rpm. Voltage: single-phase 1x230V-50 Hz
   Three-phase 3x380/415V-50 Hz.
   Different voltage and frequency on request.
2. Shaft in stainless steel AISI 420
3. Bearings over-dimensioned long-life
4. Double mechanical seal in oil chamber + radial lipseal
   Water side: silicon carbide/silicon carbide
   Motor side: graphite/alumina
5. Impeller high head cast iron Vortex
6. Cable H07RNF
7. Thermal protection standard in the single phase execution
8. Plug with capacitor till 30.000 hours
   (external for pumps SN 7)
9. Float switch regulator
10. AET-AEM electrical gear for three-phase and single-phase execution
11. Oil inspection plug
12. Air plug hole for the motor watertightness control

Performance Curves

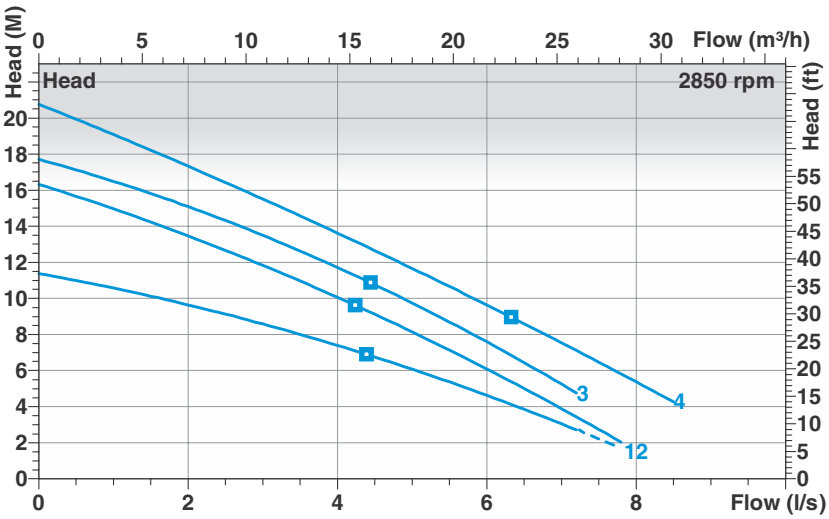

GENERAL FEATURES										PERFORMANCES										
SN	Model - Type	P1 kW	P2 kW	Volt	mF	Amp	rpm	DN	Ø mm	l/sec	0	1	2	3	4	5	6	7	8	9
										m³/h	0	3,6	7,2	10,8	14,4	18	21,6	25,2	28,8	32,4
1	KGB - CV08 - DM(AF)	1	0,8	1x230	22	4,6	2850	2”	40		11,4	10,7	9,6	8,5	7,4	6	4,7	3,4		
1	KGB - CV08 - DT	1	0,8	3x400		2,1	2850	2”	40		11,4	10,7	9,6	8,5	7,4	6	4,7	3,4		
2	KGB - CV12 - DM(AF)	1,6	1,2	1x230	30	7,1	2850	2”	40	m	16,2	15	13,4	11,8	10,1	8,2	6,1	3,8		
3	KGB - CV12 - DT	1,6	1,2	3x400		6,1	2850	2”	40		17,7	16,5	15,1	13,6	11,7	9,8	7,6	5,2		
4	KGB - CV26 - DT - A	3,3	2,6	3x400		5,9	2850	2”	40		21	19	17,1	15,4	13,5	11,8	9,8	7,7	5,3	

INSTALLATION SIzES												
SN	Model - Type	A max	A3 max	E	F3	H	DN2	DN4	P3	P4	V	KG
8	KGB - CV08 - DM(AF)	410	368	77	150	290	2”	2”	250	445	50	22
8	KGB - CV08 - DT	410	368	77	150	290	2”	2”	250	445	50	22
9	KGB - CV12 - DM(AF)	430	388	77	150	290	2”	2”	270	465	50	23,5
10	KGB - CV12 - DT	430	388	77	150	290	2”	2”	270	465	50	23,5
11	KGB - CV26 - DT - A	460	418	77	150	290	2”	2”	245	495	50	37

Dimension Drawings

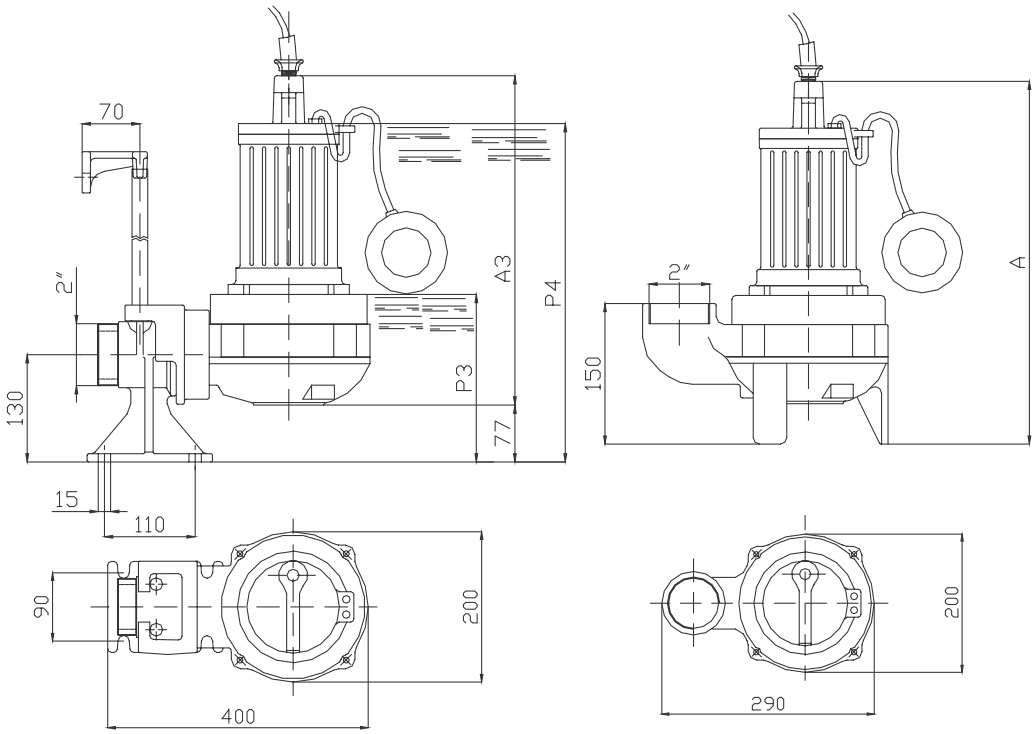

Performance Curves

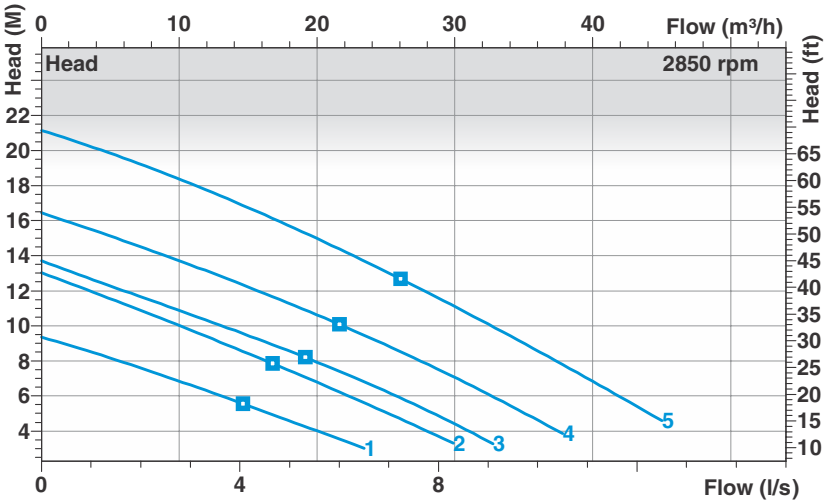

GENERAL FEATURES										PERFORMANCES														
SN	Model - Type	P1 kW	P2 kW	Volt	µF	Amp	rpm	DN	Ø mm	l/sec	0	1	2	3	4	5	6	7	8	9	10	11	12
										m³/h	0	3,6	7,2	10,8	14,4	18	21,6	25,2	28,8	32,4	36	39,6	43,2
1	KGB - CV08 - EM(AF) - A	1	0,8	1x230	22	4,6	2850	2"1/2	65	m	9,4	8,6	7.7	6,6	5,7	4,6	3,5						
1	KGB - CV08 - ET - A	1	0,8	3x400		2,1	2850	2"1/2	65		9,4	8,6	7.7	6,6	5,7	4,6	3,5						
2	KGB - CV12 - EM(AF)	1,6	1,2	1x230	30	7,1	2850	2"1/2	65		13	12	10.7	9,8	8,7	7,5	6,3	5	3,8				
3	KGB - CV12 - ET	1,6	1,2	3x400		3,1	2850	2"1/2	65		13,7	12,7	11.7	10,7	9,7	8,6	7,3	6,1	4,8	3,4			
4	KGB - CV18 - ET	2,3	1,85	3x400		4	2850	2"1/2	65		16,4	15,5	14.7	13,6	12,5	11,3	10	8,7	7,3	6	4,4		
5	KGB - CV26 - ET	3,3	2,6	3x400		5,9	2850	2"1/2	65		21,2	20	19	18	16,9	15,8	14,4	13	11,7	10,1	8,6	7	5,3

INSTALLATION SIzES												
SN	Model - Type	A max	A3 max	E	F3	H	DN2	DN4	P3	P4	V	KG
1	KGB - CV08 - EM(AF) - A	435	385	70	175	306	2"1/2	2"1/2	282	478	50*	23
1	KGB - CV08 - ET - A	435	385	70	175	306	2"1/2	2"1/2	282	478	50*	23
2	KGB - CV12 - EM(AF)	455	405	70	175	306	2"1/2	2"1/2	302	498	50*	24,5
3	KGB - CV12 - ET	455	405	70	175	306	2"1/2	2"1/2	302	498	50*	24,5
4	KGB - CV18 - ET	485	455	70	175	306	2"1/2	2"1/2	303	428	50*	31,5
5	KGB - CV26 - ET	505	455	70	175	306	2"1/2	2"1/2	397	548	50*	38

* V50 2" 1/2 gas

Dimension Drawings

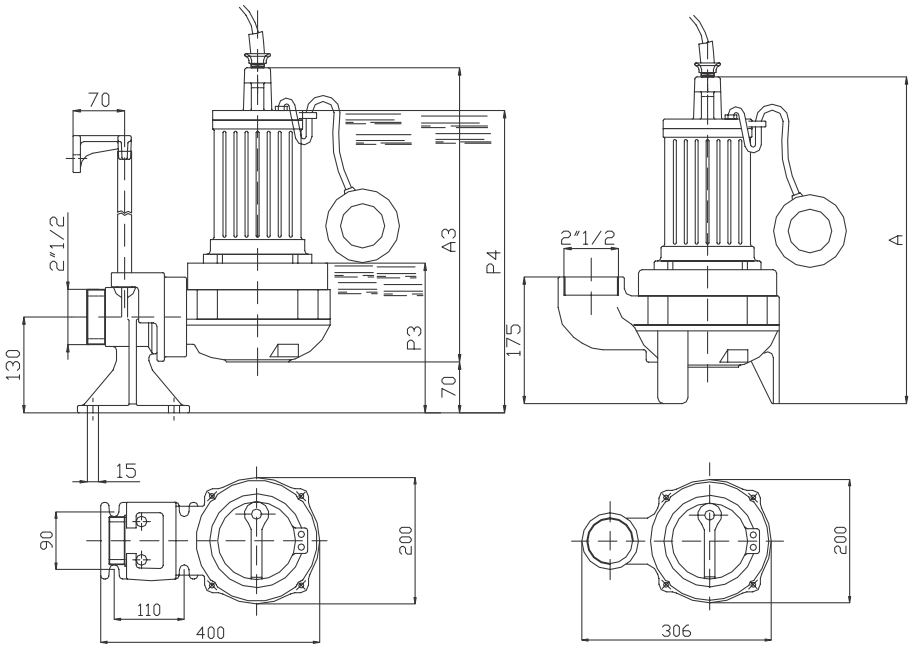

Performance Curves

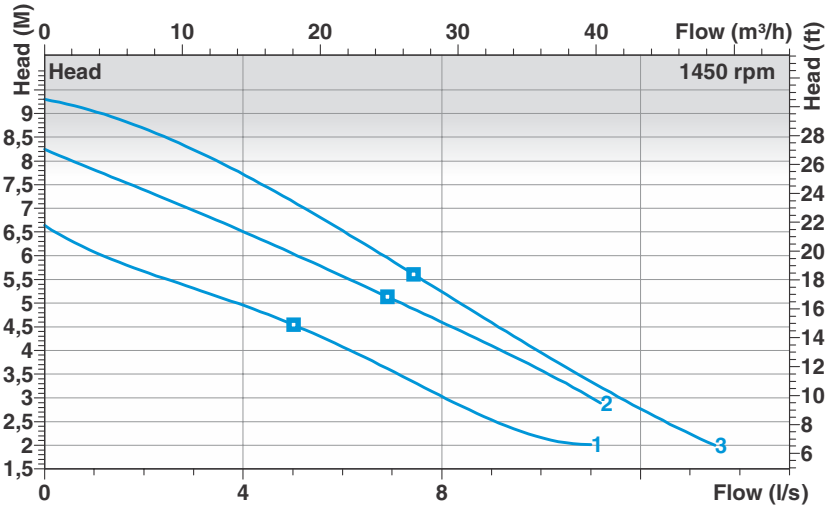

GENERAL FEATURES									PERFORMANCES								
SN	Model - Type	P1 kW	P2 kW	Volt	Amp	rpm	DN	Ø mm	l/sec	0	2	4	6	8	10	12	14
									m³/h	0	7,2	14,4	21,6	28,8	36	43,2	50,4
1	KGA - CV09 - DMS - 4	1,35	0,95	1X230	6	1450	50	45	m	6,5	5,8	5	4,1	3,3	2,5		
1	KGA - CV07 - DT - 4	0,95	0,75	3x400	2,4	1450	50	45		6,5	5,8	5	4,1	3,3	2,5		
2	KGA - CV11 - DT - 4A	1,4	1,1	3x400	3	1450	50	45		8,2	7,4	6,6	5,7	4,6	3,4	2,2	
3	KGA - CV15 - DT - 4	1,85	1,5	3x400	4	1450	50	45		9,3	8,6	7,6	6,5	5,3	4	2,9	

INSTALLATION SIzES						
SN	Model - Type	A max	P3	P4	V	KG
1	KGA - CV09 - DMS - 4	400	210	435	50	31
1	KGA - CV07 - DT - 4	400	210	435	50	30
2	KGA - CV11 - DT - 4A	400	210	435	50	32
3	KGA - CV15 - DT - 4	440	225	475	50	35

* The last digit of model name (4) denotes 4 pole (1450 rpm)

Dimension Drawings

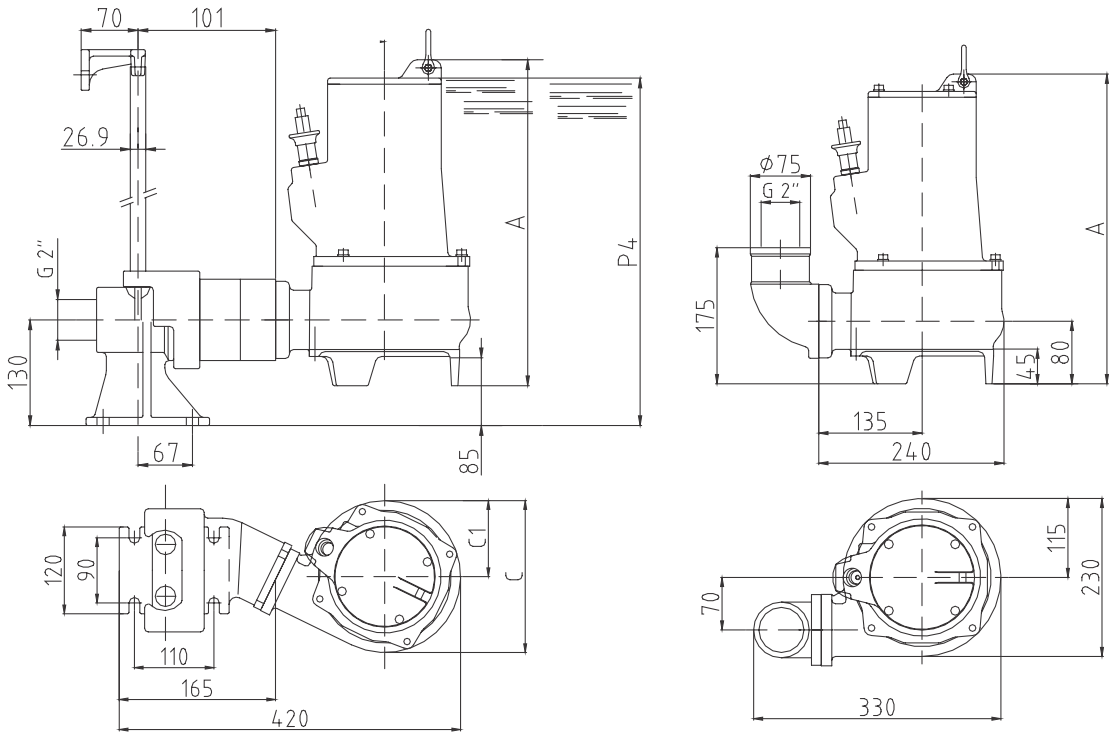

Performance Curves

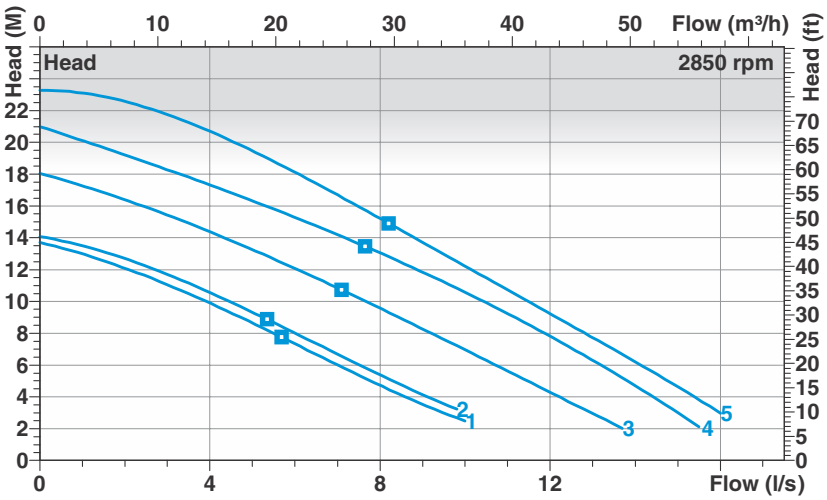

GENERAL FEATURES										PERFORMANCES									
SN	Model - Type	P1 kW	P2 kW	Volt	µF	Amp	rpm	DN	Ø mm	l/sec	0	2	4	6	8	10	12	14	16
										m³/h	0	7,2	14,4	21,6	28,8	36	43,2	50,4	57,6
1	KGB - CV11 - DMs	1,55	1,1	1X230	40	7,5	2850	50	45		13,7	12	9,8	7,3	4,8				
2	KGB - CV11 - DT	1,45	1,1	3x400		3	2850	50	45		14,1	12,7	10,6	8	5,3				
3	KGB - CV18 - DT	2,1	1,85	3x400		4,4	2850	50	45	m	18	16,3	14,3	12,2	9,7	6,9	4,2		
4	KGB - CV26 - DT	3,2	2,6	3x400		5,9	2850	50	45		20,9	19,3	17,5	15,3	13	10,4	7,8	4,6	
5	KGB - CV30 - DT	4	3	3x400		7,5	2850	50	45		23,3	22,4	20,6	18,2	15,3	12,3	9,2	6,2	3

INSTALLATION SIzES						
SN	Model - Type	A max	P3	P4	V	KG
1	KGB - CV11 - DMs	400	210	435	50	31
2	KGB - CV11 - DT	440	250	475	50	30
3	KGB - CV18 - DT	400	210	435	50	32
4	KGB - CV26 - DT	440	225	475	50	35
5	KGB - CV30 - DT	465	230	500	50	45

Dimension Drawings

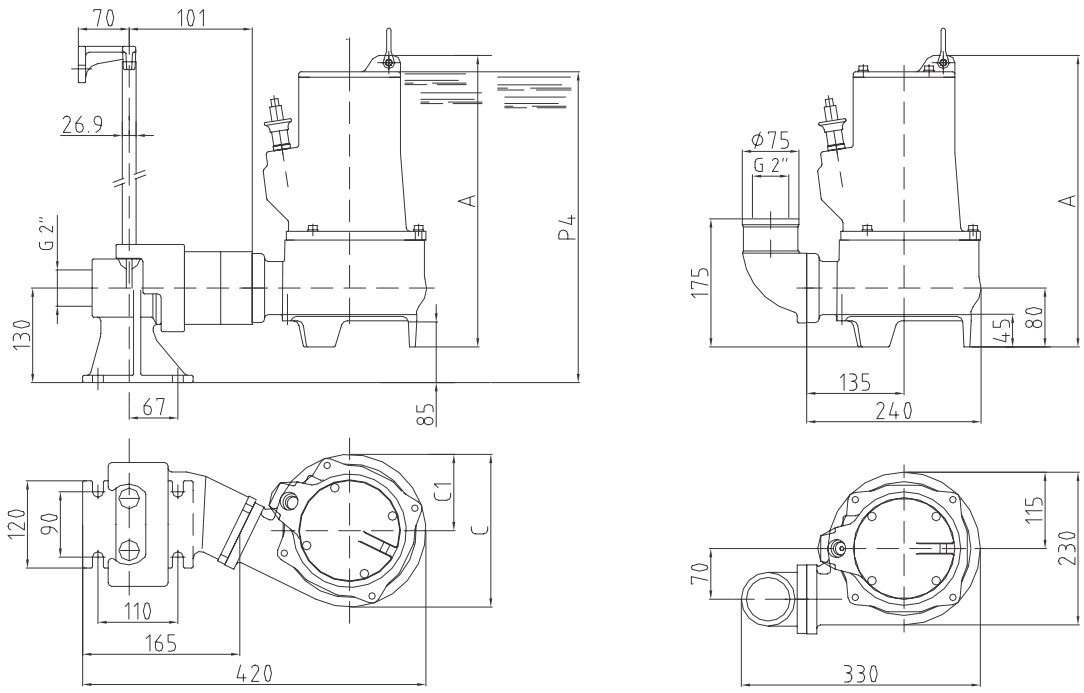

Performance Curves

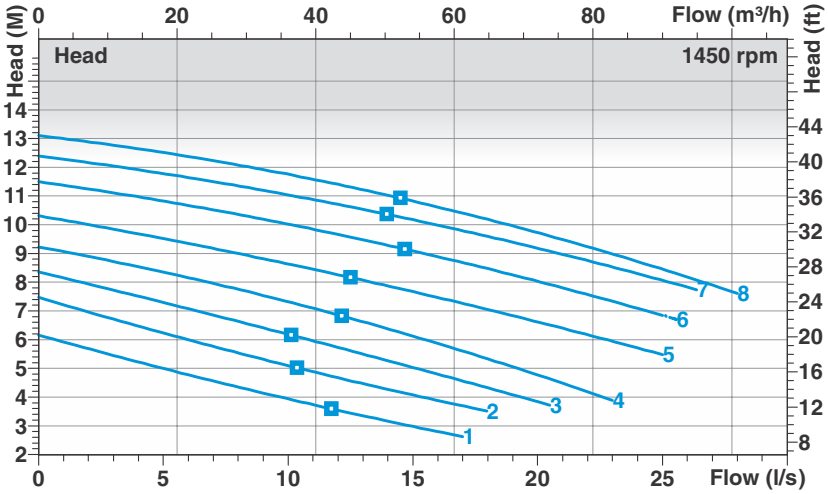

GENERAL FEATURES									PERFORMANCES															
SN	Model - Type	P1 kW	P2 kW	Volt	Amp	rpm	DN	Ø mm	l/sec	0	2	4	6	8	10	12	14	16	18	20	22	24	26	28
									m³/h	0	7	14	21,6	28,8	36	43,2	50,4	57,6	64,8	72	79,2	86,4	93,6	100,8
1	KGA - CV11 - ET - 4	1,5	1,1	3x400	3,2	1450	65	65	m	6	5,8	6	5,8	5,4	4,7	4,2	3,8	3						
2	KGA - CV15 - ET - 4	1,9	1,5	3x400	4	1450	65	65		8	6,5	6	5,8	5,7	5,2	4,8	4,3	3,8	3,3					
3	KGA - CV22 - ET - 4	2,9	2,2	3x400	4,8	1450	65	65		8,4	7,8	7,5	7	6,6	6,1	5,8	5,3	4,9	4,3	3,8				
4	KGA - CV35 - ET - 4A	4	3,5	3x400	6,8	1450	65	65		9,5	8,8	8,5	8	7,6	7,2	7	6,2	5,9	5,5	5	4			
5	KGA - CV35 - ET	4	3,5	3x400	8	1450	65	65		10,5	10	9,5	9,1	8,8	8,5	8,2	8	7,6	7,2	6,6	6	5,6		
6	KGA - CV42 - ET - 4A	5	4,2	3x400	9,2	1450	65	65		11,8	11,2	10,8	10,3	10,1	9,9	9,7	9,5	8,8	8,7	8,2	7,6	7,1		
7	KGA - CV42 - ET - 4	5	4,2	3x400	9,2	1450	65	65		12,8	12,1	11,7	11,4	11,1	10,9	10,7	10,5	10,2	9,8	9,4	8,8	8,4	7,6	
8	KGA - CV55 - ET - 4	6,8	5,5	3x400 Δ	12	1450	65	65		13,6	12,8	12,4	12	11,7	11,5	11,3	11,3	10,8	10,5	10	9,5	8,7	8	7,5

INSTALLATION SIzES																															
SN	Model - Type	A max	A1	A2	B	B1	B2	C	C1	C2	D	D1	E	F	F2	F3	H	J	X	Y	Z	Z1	Z2	Z3	Z4	Z6	DN3	P3	P4	V	KG
1	KGA - CV11 - ET - 4	475	300	160	260	154	255	220	110	55	635	356	56	59	105	205	400	134	130	42,4	84	100	12	50	96	132	65	330	515	65	39
2	KGA - CV15 - ET - 4	475	300	160	250	154	255	220	110	55	635	356	56	59	105	205	400	134	130	42,4	84	100	12	50	96	132	65	330	515	65	39
3	KGA - CV22 - ET - 4	540	325	168	320	165	265	300	150	106	780	430	45	80	125	225	460	160	145	60,3	95	150	14	120	120	175	80	300	570	80	52
4	KGA - CV35 - ET - 4A	540	325	168	320	165	265	300	150	106	780	430	45	80	125	225	460	160	145	60,3	95	150	14	120	120	175	80	300	570	80	53
5	KGA - CV35 - ET	540	325	168	320	165	265	300	150	106	780	430	45	80	125	225	460	160	145	60,3	95	150	14	120	120	175	80	300	570	80	53
6	KGA - CV42 - ET - 4A	540	325	168	320	165	265	300	150	106	780	430	45	80	125	225	460	160	145	60,3	95	150	14	120	120	175	80	300	570	80	55
7	KGA - CV42 - ET - 4	540	325	168	320	165	265	300	150	106	780	430	45	80	125	225	460	160	145	60,3	95	150	14	120	120	175	80	300	570	80	55
8	KGA - CV55 - ET - 4	590	325	168	320	165	265	300	150	106	780	430	45	80	125	225	460	160	145	60,3	95	150	14	120	120	175	80	350	620	80	58

* The last digit of model name (4) denotes 4 pole (1450 rpm)

Dimension Drawings

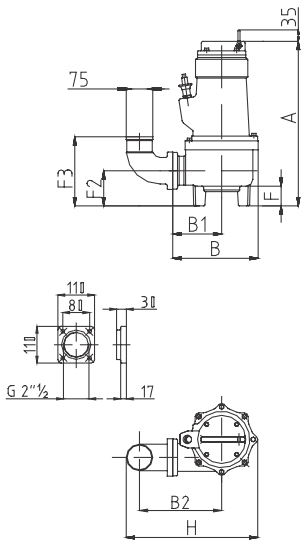

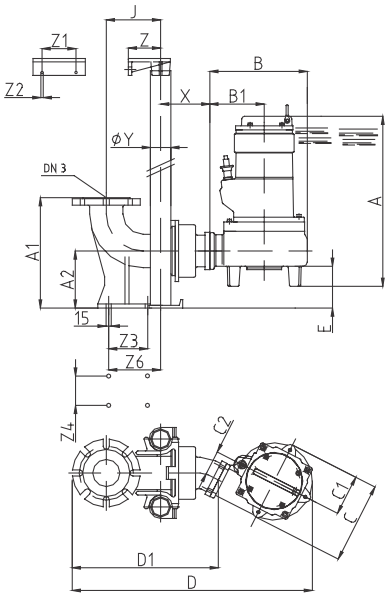

Performance Curves

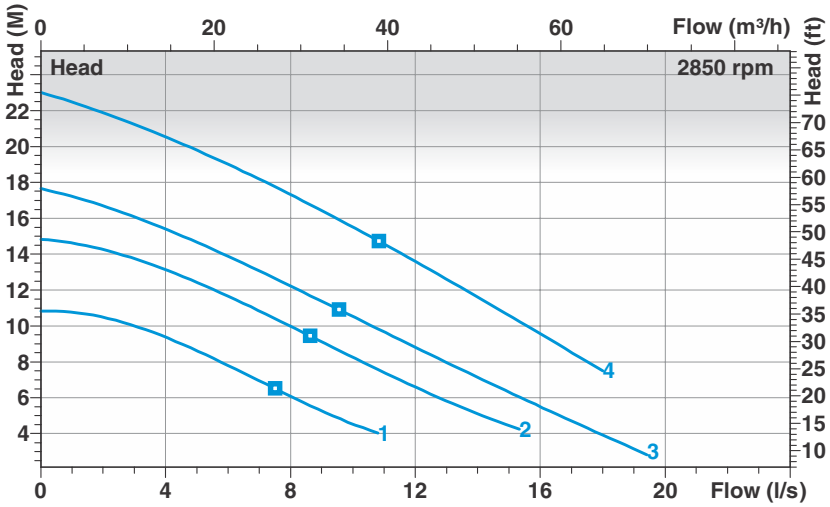

GENERAL FEATURES										PERFORMANCES												
SN	Model - Type	P1 kW	P2 kW	Volt	µF	Amp	rpm	DN	Ø mm	l/sec	0	2	4	6	8	10	12	14	16	18	20
										m³/h	0	7	14	21,6	28,8	36	43,2	50,4	57,6	64,8	72
1	KGB - CV11 - EMS - A	1,5	1,1	1x230	40	8	2850	65	50		10,8	10,5	9,4	7,8	6,2	4,7					
1	KGB - CV11 - ET - A	1,4	1,1	3x400		3	2850	65	50		10,78	10,5	9,4	7,8	6,2	4,7					
2	KGB - CV18 - ET - AA	2,3	1,85	3x400		4	2850	65	50	m	14,8	14,4	13,2	11,8	9,9	8,3	6,7	5,2			
3	KGB - CV26 - ET - AA	3,2	2,6	3x400		5,8	2850	65	50		17,6	16,8	15,5	14	12,4	10,6	9	7,3	5,7	4	
4	KGB - CV40 - ET - A	4,9	4	3x400 Δ		9	2850	65	50		23	22	20,7	19,2	17,5	15,6	13,7	11,7	9,7	7,7	

INSTALLATION SIzES																											
SN	Model - Type	A max	A1	A2	B	B1	B2	C	C1	C2	D	D1	E	H	J	X	Y	Z	Z1	Z3	Z4	Z6	DN3	P3	P4	V	KG
1	KGB - CV11 - EMs - A	475	300	160	250	154	255	220	110	55	635	355	56	400	134	130	42,4	84	100	90	100	140	65	320	510	65	31
1	KGB - CV11 - ET - A	475	300	160	250	154	255	220	110	55	635	355	56	400	134	130	42,4	84	100	90	100	140	65	320	510	65	31
2	KGB - CV18 - ET - AA	475	300	160	250	154	255	220	110	55	635	355	56	400	134	130	42,4	84	100	90	100	140	65	320	510	65	33
3	KGB - CV26 - ET - AA	485	300	160	250	145	242	220	110	55	635	355	56	400	134	130	42,4	84	100	90	100	140	65	310	525	65	40
4	KGB - CV40 - ET - A	505	325	168	270	148	258	240	120	72	707	430	64	425	160	145	60,3	95	150	120	120	175	80	345	555	80	51

Dimension Drawings

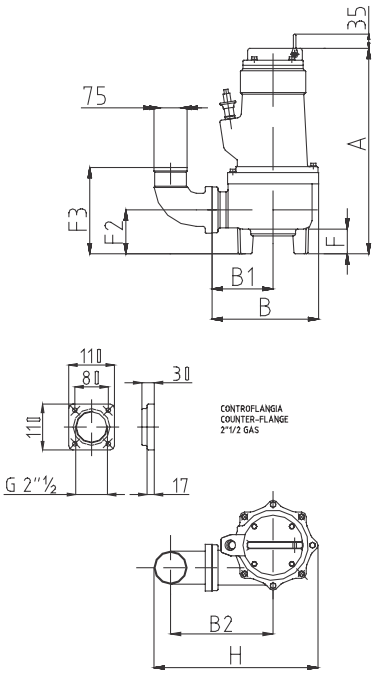

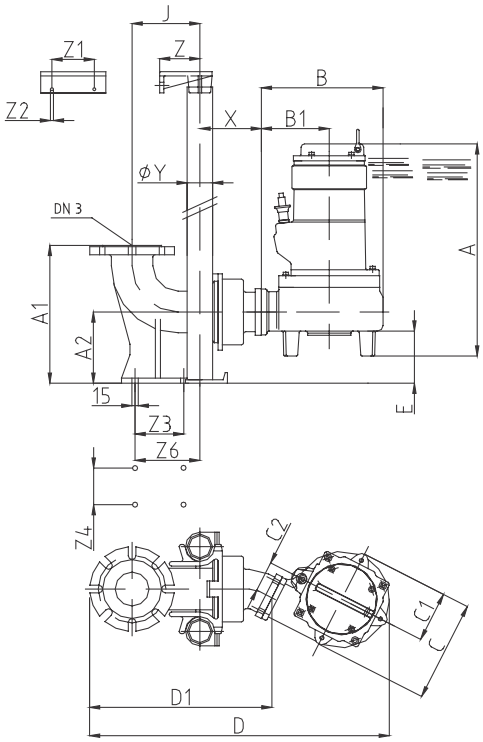

Performance Curves

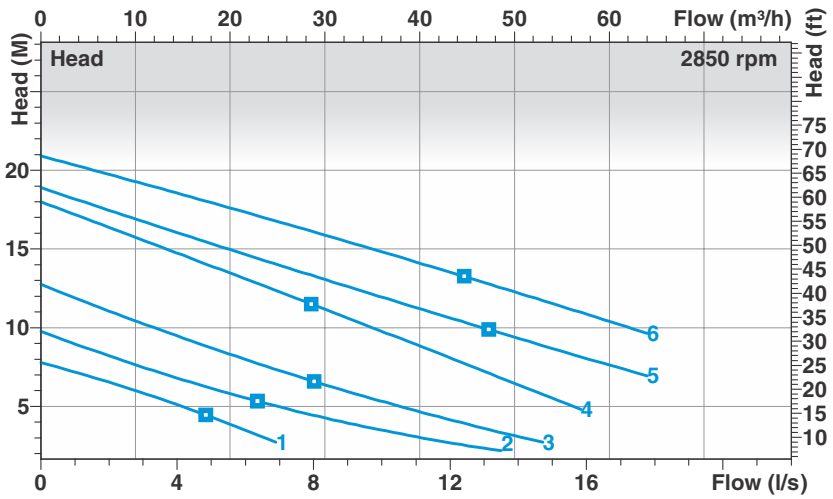

GENERAL FEATURES										PERFORMANCES													
SN	Model - Type	P1 kW	P2 kW	Volt	µF	Amp	rpm	DN	Ø mm	l/sec	0	2	4	6	8	10	12	14	16	18	20	22
										m³/h	0	7	14	21,6	28,8	36	43,2	50,4	57,6	64,8	72	79,2
1	KGB - CV08 - EMs	1,1	0,8	1x230	22	5,5	2850	65	65		7,5	6,8	5	3,5								
1	KGB - CV08 - ET	1,1	0,8	3x400		2	2850	65	65		7,5	6,8	5	3,5								
2	KGB - CV11 - EMs	1,3	1,1	1x230	30	7,1	2850	65	65		9,6	8,4	7	5,6	4,4	3,5	2,8					
2	KGB - CV11 - ET	1,3	1,1	3x400		3	2850	65	65		9,6	8,4	7	5,6	4,4	3,5	2,8					
3	KGB - CV18 - ET - A	2,2	1,85	3x400		4	2850	65	65	m	14	12,9	11,1	9,2	7,2	5,3	3,7	2,8				
4	KGB - CV26 - ET - A	3,2	2,6	3x400		5,8	2850	65	65		17,7	16,5	15	13,6	11,6	9,4	7,4	5,3	3,8			
5	KGB - CV40 - ET	4,9	4	3x400		9	2850	65	65		19	17,3	15,7	15,2	14	11,8	10,5	8,8	7,5	7		
6	KGB - CV55 - ET - A	6,8	5,5	3x400 Δ		12	2850	65	65		21,1	19,6	18,5	17,5	16,3	15,2	13,7	12	10,8	9,7		

INSTALLATION SIzES																														
SN	Model - Type	A max	A1	A2	B	B1	B2	C	C1	C2	D	D1	E	F	F2	F3	H	J	X	Y	Z	Z1	Z2	Z3	Z4	Z6	DN3	P3	P4	V	KG
1	KGB - CV08 - EMs	470	300	160	250	145	242	220	110	55	635	356	56	59	105	205	400	134	130	42,4	84	100	12	90	96	132	65	330	510	65	24
1	KGB - CV08 - ET	470	300	160	250	145	242	220	110	55	635	356	56	59	105	205	400	134	130	42,4	84	100	12	90	96	132	65	330	510	65	24
2	KGB - CV11 - EMs	470	300	160	250	145	242	220	110	55	635	356	56	59	105	205	400	134	130	42,4	84	100	12	90	96	132	65	320	510	65	25
2	KGB - CV11 - ET	470	300	160	250	145	242	220	110	55	635	356	56	59	105	205	400	134	130	42,4	84	100	12	90	96	132	65	320	510	65	25
3	KGB - CV18 - ET - A	470	300	160	250	145	242	220	110	55	635	356	56	59	105	205	400	134	130	42,4	84	100	14	90	100	140	65	320	515	65	33
4	KGB - CV26 - ET - A	485	300	160	250	145	242	220	110	55	635	355	56	59	105	205	400	134	130	42,4	84	100	14	90	100	140	65	310	525	65	40
5	KGB - CV40 - ET	505	325	168	270	148	258	240	220	72	707	430	64	59	105	205	425	160	145	60,3	95	150	14	120	120	175	80	345	555	80	51
6	KGB - CV55 - ET - A	590	325	168	320	165	265	300	150	106	780	430	45	80	125	225	460	160	145	60,3	95	150	14	120	120	175	80	345	620	80	58

Dimension Drawings

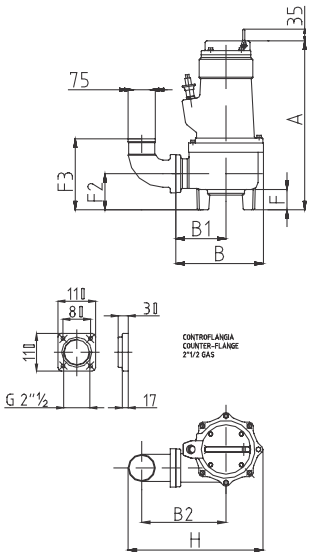

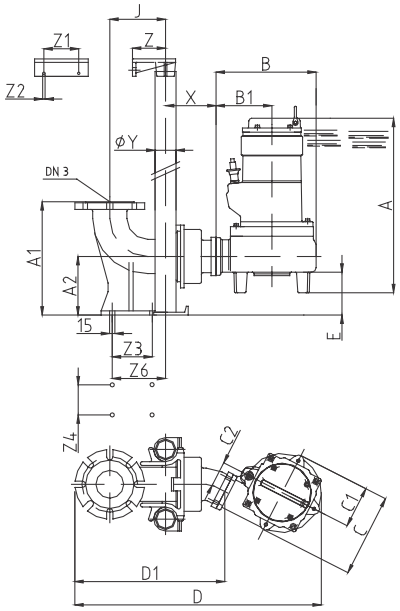

SUBMERSIBLE PUMPS - Vortex Impeller

KG Series
1.2 - 48 kW

Discharge size
DN 65 + 100

Technical Features

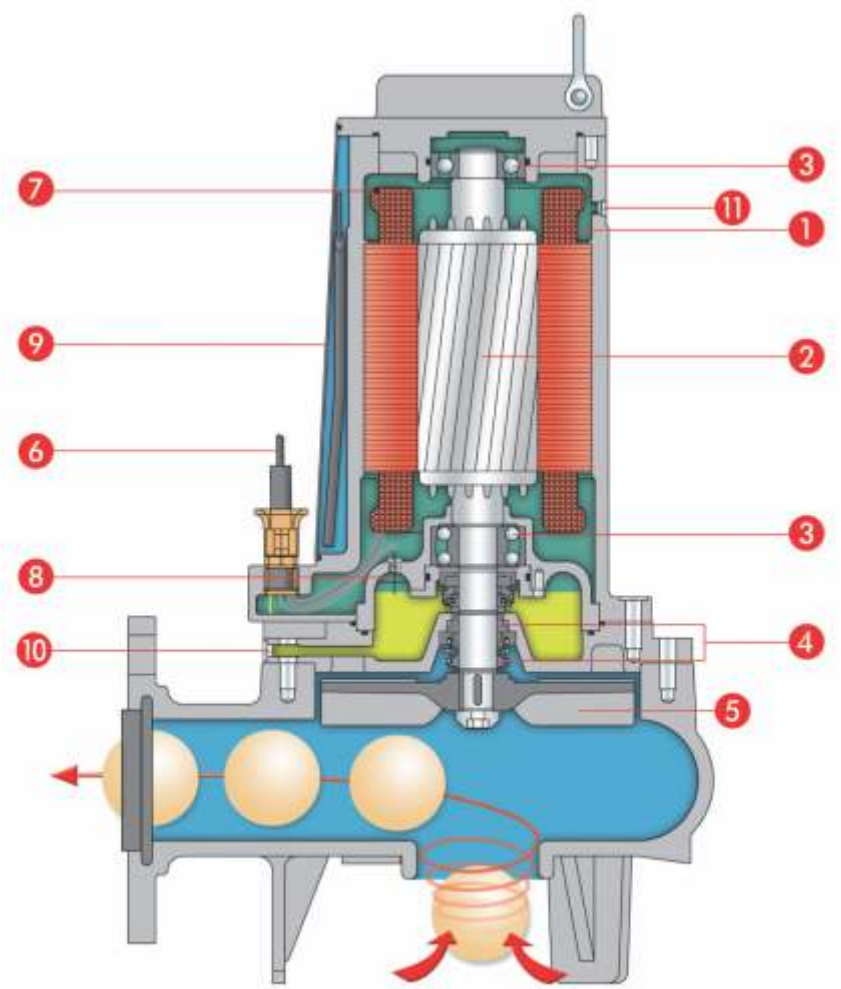

1. Fully submersible pressure tight electric motor
   Insulation class H. Protection degree IP 68
   Speed: 1450 - 2850 rpm.
   Voltage: three-phase 3x380/415V-50 Hz.
   Different voltage and frequency on request.
2. Shaft in stainless steel AISI 420
3. Pre-lubricated long-life bearings
4. Double mechanical seal in oil chamber
   Water side: silicon carbide/silicon carbide
   Motor side: silicon carbide/silicon carbide
5. Impeller high efficiency cast iron Vortex
6. Cable H07RNF
7. Thermal protection embedded in winding (optional)
8. Oil chamber probe (optional)
9. Cooling jacket
10. Oil inspection plug
11. Hole for the motor watertightness control

Performance Curves

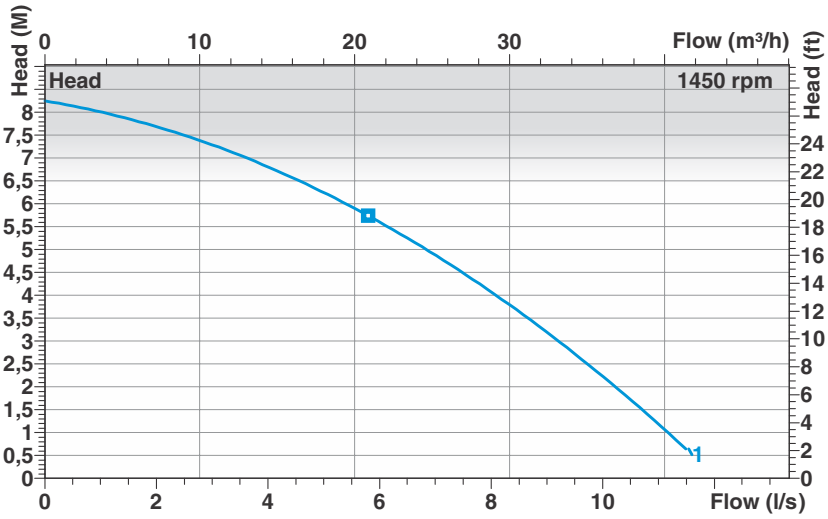

GENERAL FEATURES									PERFORMANCES							
SN	Model - Type	P1 kW	P2 kW	Volt	Amp	rpm	DN	Ø mm	l/sec	0	2	4	6	8	10	11
									m³/h	0	7,2	14,4	21,6	28,8	36	39,6
1	KGB - CV10 - FT - 4	1,25	1	3X400	2,7	1450	80	50	m	8,3	7,6	6,85	5,6	4,1	2,25	0,5

* The last digit of model name (4) denotes 4 pole (1450 rpm)

Dimension Drawings

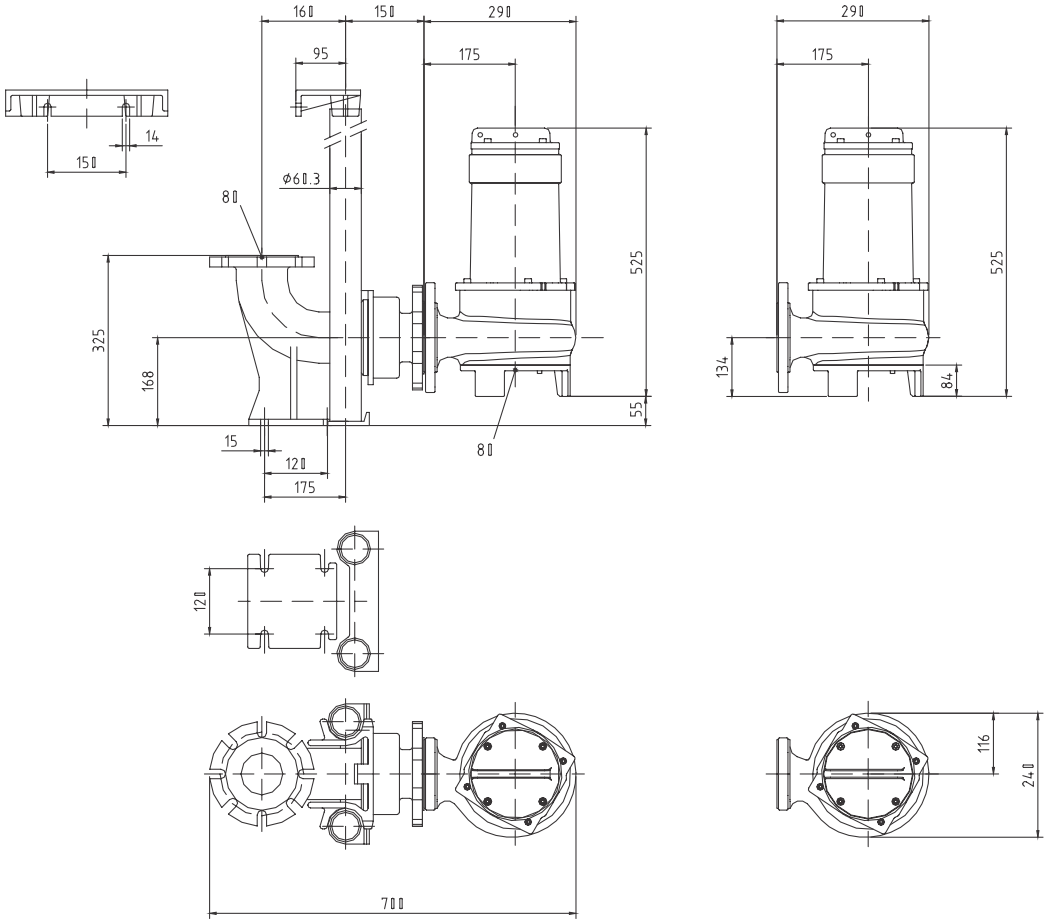

Performance Curves

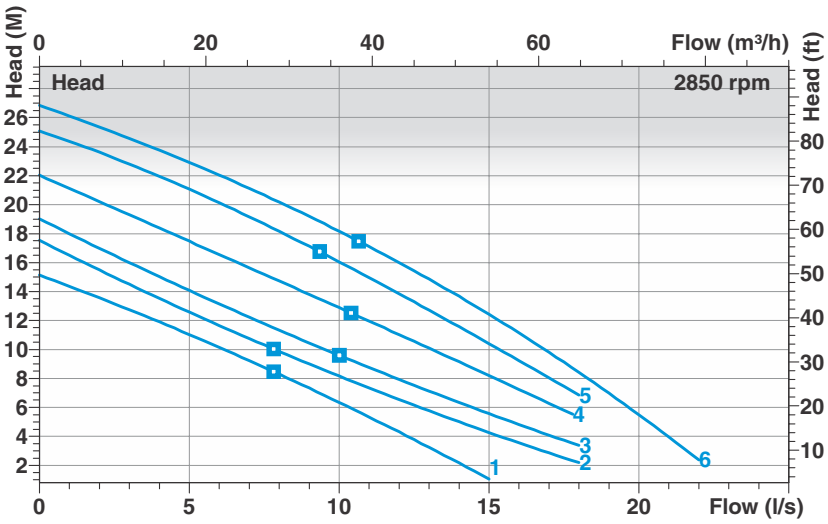

GENERAL FEATURES -									PERFORMANCES									
SN	Model - Type	P1 kW	P2 kW	Volt	Amp	rpm	DN	Ø mm	l/sec	0	3	6	9	12	15	18	21	22
									m³/h	0	10,8	21,6	32,4	43,2	54	64,8	75,6	79,2
1	KGB - CV11 - FT	1,3	1,1	3X400	2,5	2850	80	50	m	15,5	12,4	9,7	7	4,5	1,2			
2	KGB - CV18 - FT - A	2,3	1,85	3X400	4	2850	80	50		17,5	14,4	11,7	9	6,5	4,2	2		
3	KGB - CV26 - FT - A	3,3	2,6	3X400	5,8	2850	80	50		19	16	13,2	10,5	8	5,7	3,2		
4	KGB - CV30 - FT - A	3,7	3	3X400	6,1	2850	80	50		22	19	17	13,8	11	8	4,5		
5	KGB - CV40 - FT - A	4,9	4	3X400	9	2850	80	50		25,1	22,5	20,2	17,1	14	10,5	7		
6	KGB - CV55 - FT - AA	6,8	5,5	3x400 Δ	12	2850	80	50		26,8	24,4	22	19,1	16	12,5	8,5	4	2

INSTALLATION SIZES				
SN	Model - Type	A max	V	KG
1	KGB - CV11 - FT	507	80N	41
2	KGB - CV18 - FT - A	507	80N	42
3	KGB - CV26 - FT - A	507	80N	44
4	KGB - CV30 - FT - A	513	80N	45
5	KGB - CV40 - FT - A	513	80N	49
6	KGB - CV55 - FT - AA	563	80N	57

Dimension Drawings

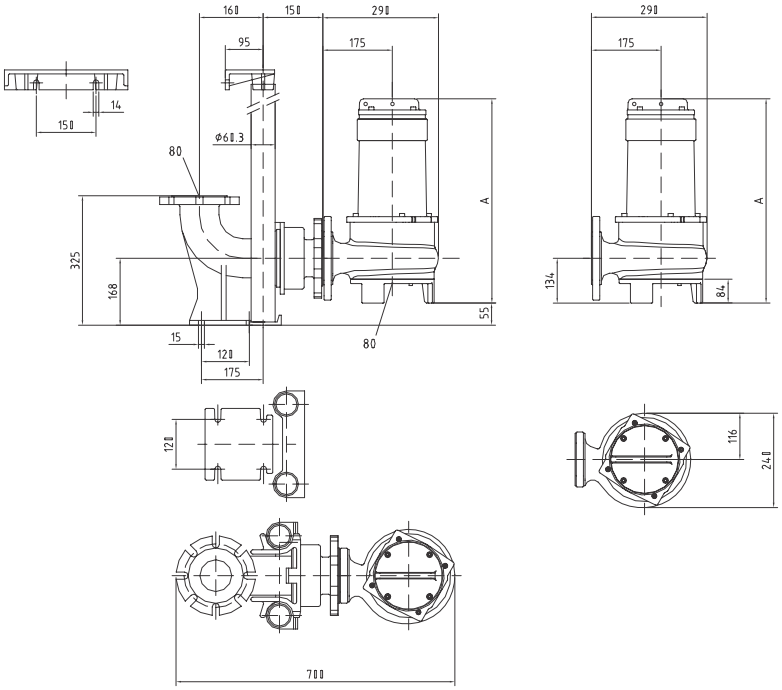

Performance Curves

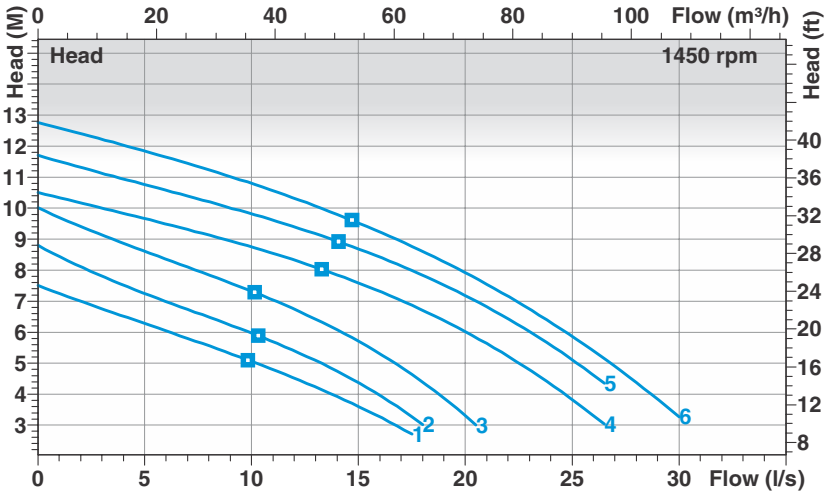

GENERAL FEATURES									PERFORMANCES								
SN	Model - Type	P1 kW	P2 kW	Volt	Amp	rpm	DN	Ø mm	l/sec	0	4	8	12	16	20	24	28
									m³/h	0	14	29	43,2	57,6	72	86,4	100,8
1	KGA - CV13 - FT - 4	1,5	1,3	3x400	4,2	1450	80	68	m	7,5	6,5	5,5	4,6	3,3			
2	KGA - CV17 - FT - 4	1,9	1,7	3x400	4,5	1450	80	68		8,7	7,5	6,5	5,4	3,9			
3	KGA - CV22 - FT - 4	2,9	2,2	3x400	5	1450	80	68		10	8,9	7,8	6,7	5,3	3,4		
4	KGA - CV30 - FT - 4	3,8	3	3x400	7	1450	80	68		10,5	9,8	9,1	8,4	7,3	5,8	4,2	
5	KGA - CV35 - FT - 4	4	3,5	3x400	8	1450	80	68		11,7	10,9	10,2	9,4	8,5	7,1	5,4	
6	KGA - CV42 - FT - 4	5	4,2	3x400	9,2	1450	80	68		12,9	12,1	11,2	10,3	9,2	8	6,4	4,4

INSTALLATION SIZES					
SN	Model - Type	A max	P4	V	KG
1	KGA - CV13 - FT - 4	540	560	80N	62
2	KGA - CV17 - FT - 4	540	560	80N	62
3	KGA - CV22 - FT - 4	540	560	80N	62
4	KGA - CV30 - FT - 4	560	580	80N	68
5	KGA - CV35 - FT - 4	560	580	80N	68
6	KGA - CV42 - FT - 4	610	580	80N	68

* The last digit of model name (4) denotes 4 pole (1450 rpm)

Dimension Drawings

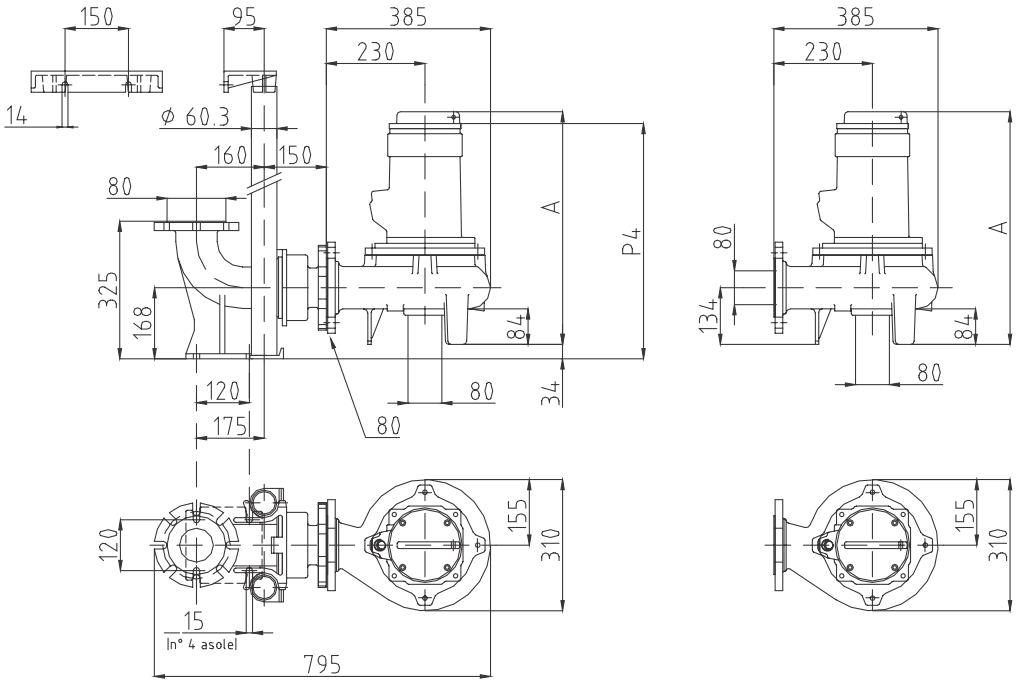

Performance Curves

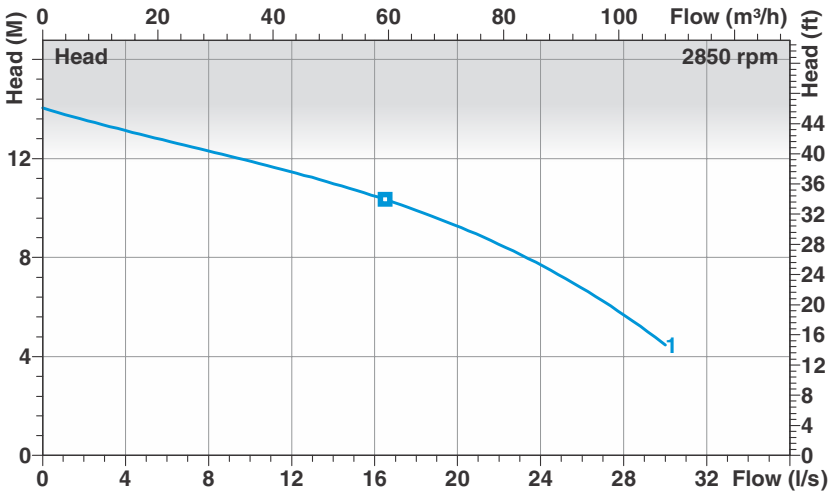

GENERAL FEATURES											PERFORMANCES								
SN	Model - Type	P1 kW	P2 kW	Volt	Amp	rpm	DN	Ø mm	V	KG	l/sec	0	4	8	12	16	20	24	28
											m³/h	0	14	29	43,2	57,6	72	86,4	100,8
1	KGA - CV55 - FT - 4A	6,8	5,5	3x400 Δ	12	1450	80	72	80N	70	m	14	13,1	12,3	11,5	10,6	9,3	7,7	5,7

Dimension Drawings

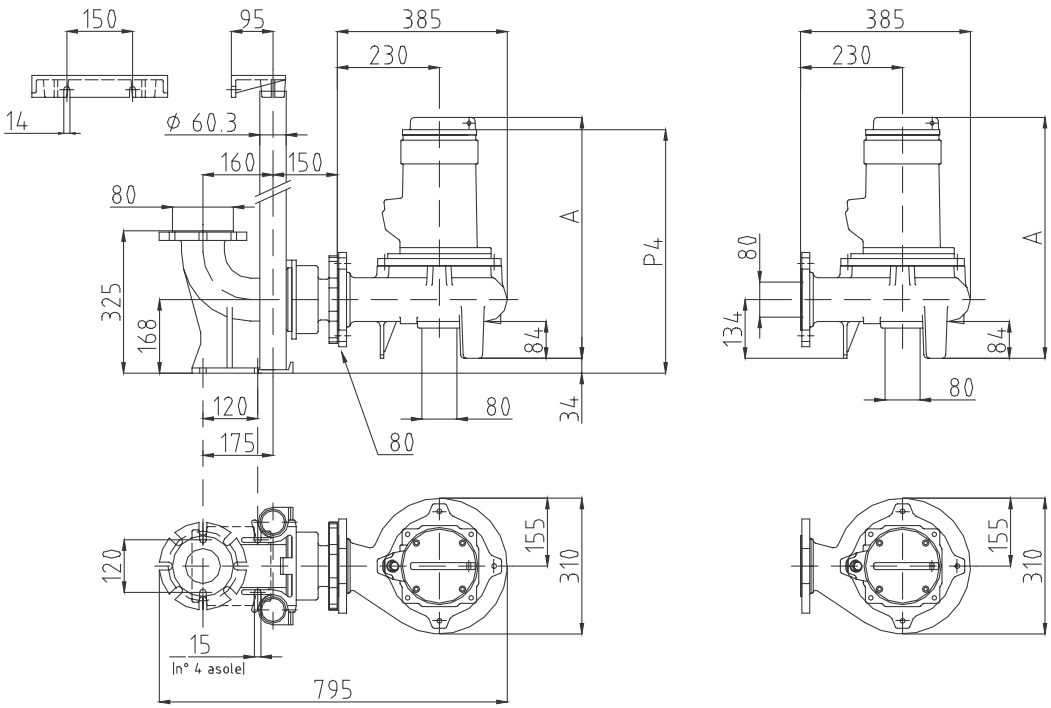

Performance Curves

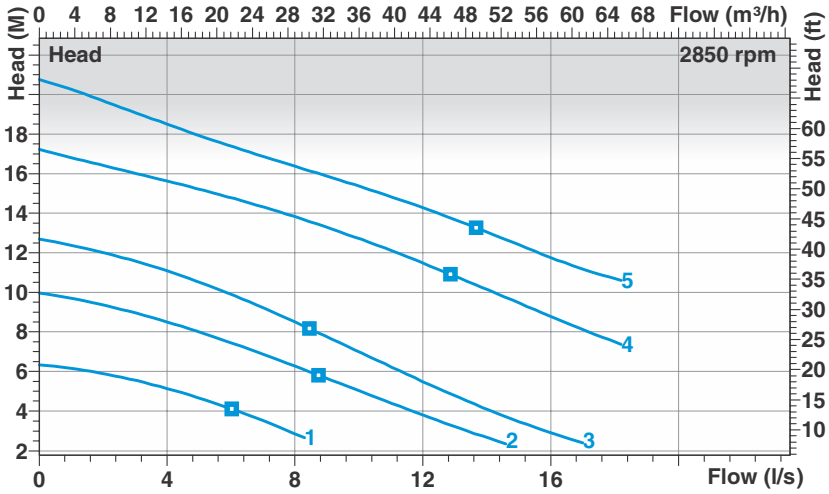

GENERAL FEATURES										PERFORMANCES										
SN	Model - Type	P1 kW	P2 kW	Volt	µF	Amp	rpm	DN	Ø mm	l/sec	0	2	4	6	8	10	12	14	16	18
										m³/h	0	7,2	14,4	21,6	28,8	36	43,2	50,4	57,6	64,8
1	KGB - CV12 - FMs	1,5	1,2	1x230	30	7	2850	80	80	m	6,3	5,8	5,2	4,2	2,8					
1	KGB - CV12 - FT	1,5	1,2	3x400		3,1	2850	80	80		6,3	5,8	5,2	4,2	2,8					
2	KGB - CV18 - FT	2,3	1,85	3x400		4,4	2850	80	80		9,9	9,4	8,5	7,5	6,3	5,1	3,8	2,6		
3	KGB - CV26 - FT	3,2	2,6	3x400		5,5	2850	80	80		12,6	12,1	11,2	9,8	8,5	7,1	5,6	4,2	2,8	
4	KGB - CV40 - FT	5	4	3x400		8,9	2850	80	80		17,1	16,4	15,6	14,7	13,8	12,7	11,5	10,2	8,7	7
5	KGB - CV55 - FT	7	5,5	3X400Δ		12	2850	80	80		20,7	19,6	18,5	17,4	16,3	15,2	14,2	13,1	11,9	10,7

INSTALLATION SIZES										
SN	Model - Type	A max	B	B1	C	C1	D	P4	V	KG
1	KGB - CV12 - FMs	490	280	180	212	106	690	546	80N	25
1	KGB - CV12 - FT	490	280	180	212	106	690	546	80N	25
2	KGB - CV18 - FT	540	280	180	212	108	690	596	80N	62
3	KGB - CV26 - FT	540	280	180	212	108	690	596	80N	62
4	KGB - CV40 - FT	560	385	230	310	155	795	616	80N	68
5	KGB - CV55 - FT	610	385	230	310	155	795	666	80N	70

Dimension Drawings

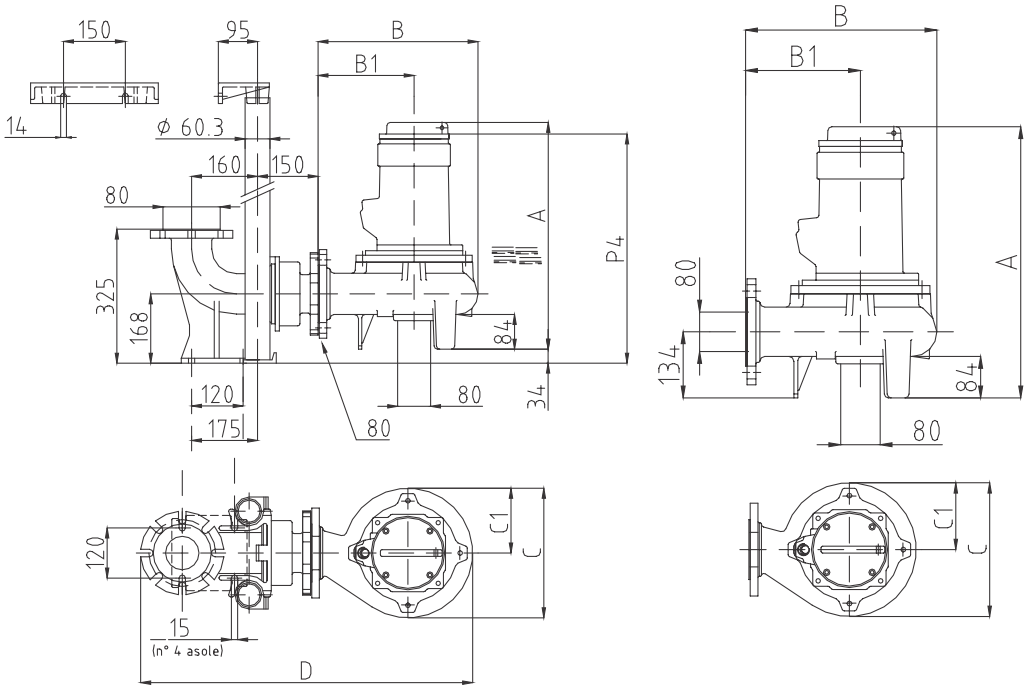

Performance Curves

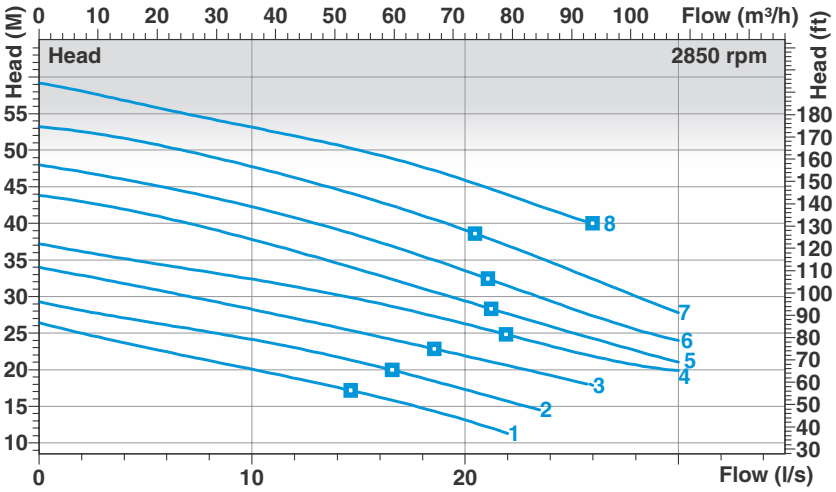

GENERAL FEATURES									PERFORMANCES								
SN	Model - Type	P1 kW	P2 kW	Volt	Amp	rpm	DN	Ø mm	l/sec	0	4	8	12	16	20	24	28
									m³/h	0	14	29	43,2	57,6	72	86,4	100,8
1	KGB - CV75 - FT	9,3	7,5	3x400 Δ	16	2850	80	80	m	26,5	23	21,5	19	16	13		
2	KGB - CV95 - FT	10,8	9,5	3x400 Δ	19	2850	80	80		29,2	27	25,5	22,8	20,6	17,5		
3	KGB - CV110 - FT	13,5	11	3x400 Δ	22	2850	80	80		34,1	31	29,8	26,7	25	22	18,5	
4	KGB - CV190 - FT - A	21,8	19	3x400 Δ	37	2850	80	80		37,2	35	33,5	31	28,5	26	23,5	21
5	KGB - CV190 - FT	22	19	3x400 Δ	37	2850	80	80		43,9	41,8	39	36,3	33,5	29,3	25,5	22,2
6	KGB - CV220 - FT	25	22	3x400 Δ	40	2850	80	80		48	46	43	41,5	37	33,5	29,5	25,5
7	KGB - CV240 - FT	27,5	24	3x400 Δ	46	2850	80	80		53,5	51	49,5	46,5	43	39	34,5	30
8	KGB - CV280 - FT	28	28	3x400 Δ	49	2850	80	80		59	57	54,5	52	49	46,5	41,5	

INSTALLATION SIzES																		
SN	Model - Type	A max	A3 max	B	B1	C	C1	D	E	P2	P4	R max	T max	U max	V1	V2	V	KG
1	KGB - CV75 - FT	643	775	365	220	312	147	780	71	420	700	740	738	843	260	320	80N	118
2	KGB - CV95 - FT	690	775	365	220	312	147	780	71	420	745	740	738	843	260	320	80N	147
3	KGB - CV110 - FT	690	775	365	220	312	147	780	71	420	745	740	738	843	260	320	80N	148
4	KGB - CV190 - FT - A	765	945	365	220	312	147	780	71	420	820	1050	1075	1180	310	370	80N	170
5	KGB - CV190 - FT	945	945	410	252	316	158	820	90	450	960	1050	1075	1180	310	370	80N	176
6	KGB - CV220 - FT	945	945	410	252	316	158	820	90	450	960	1050	1075	1180	310	370	80N	180
7	KGB - CV240 - FT	1035	1035	410	252	316	158	820	90	450	1050	1050	1075	1180	310	370	80N	206
8	KGB - CV280 - FT	1035	1035	410	252	316	158	820	90	450	1050	1050	1075	1180	310	370	80N	208

Dimension Drawings

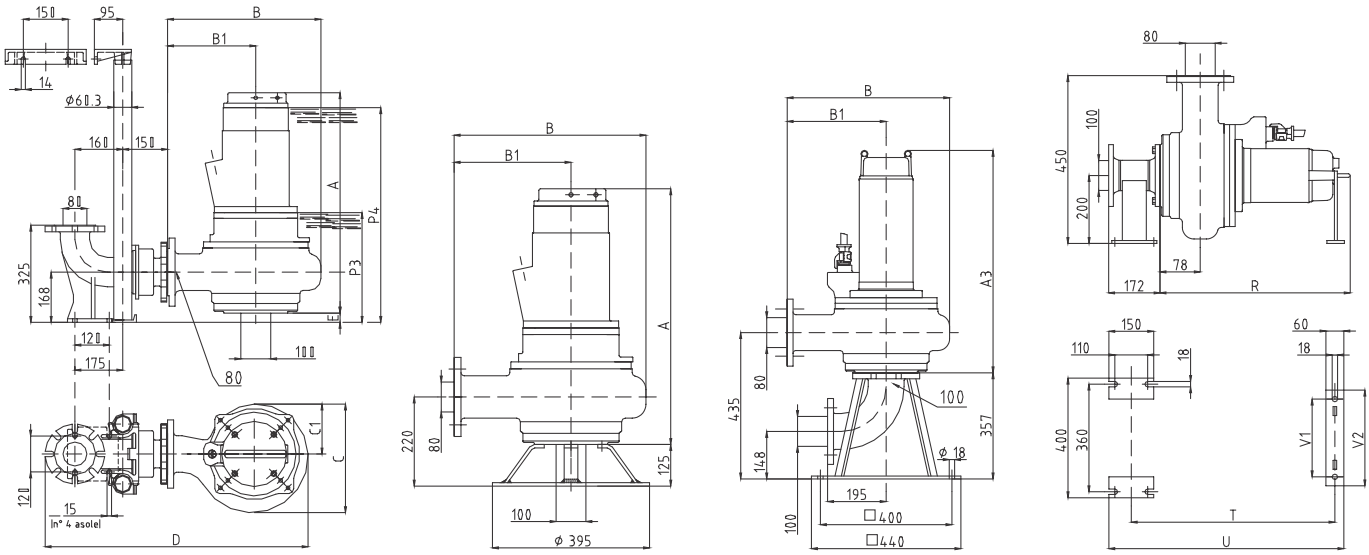

Technical Features

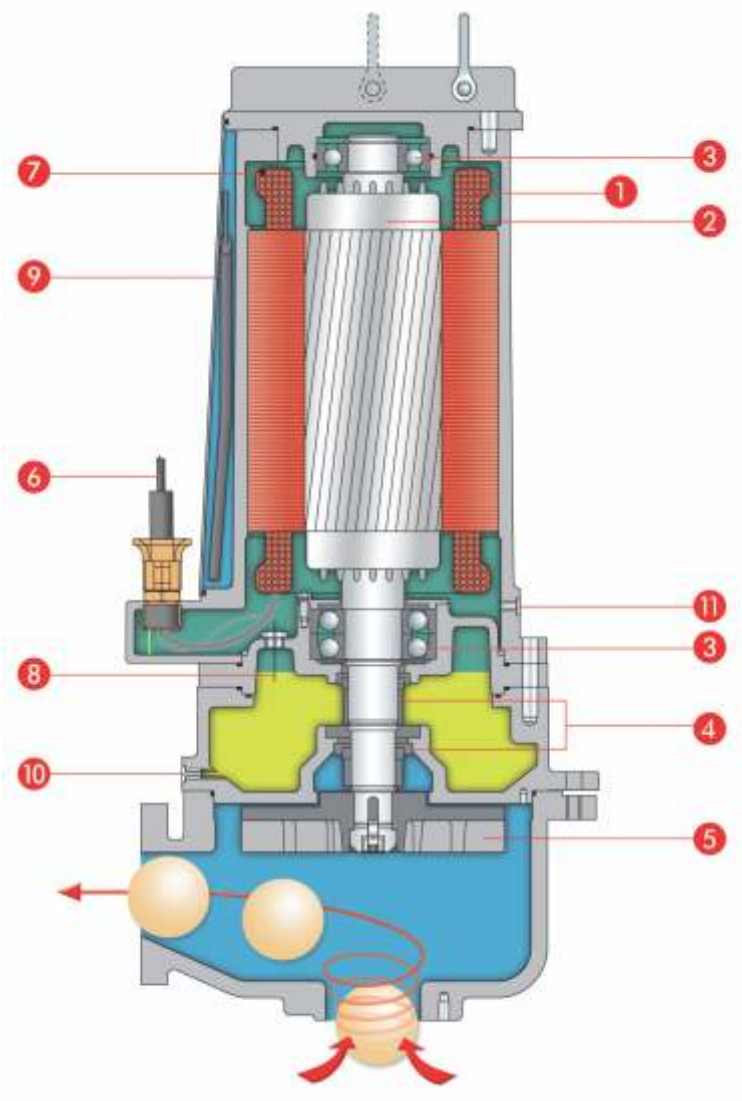

1. Fully submersible pressure tight electric motor
   Insulation class H. Protection degree IP 68
   Speed: 1450 - 2850 rpm.
   Voltage: three-phase 3x380/415V-50 Hz.
   Different voltage and frequency on request.
2. Shaft in stainless steel AISI 420
3. Pre-lubricated long-life bearings
4. Double mechanical seal in oil chamber
   Water side: silicon carbide/silicon carbide
   Motor side: silicon carbide/silicon carbide
5. Impeller high efficiency cast iron Vortex
6. Cable H07RNF
7. Thermal protection embedded in winding (optional)
8. Oil chamber probe (optional)
9. Cooling jacket
10. Oil inspection plug
11. Hole for the motor watertightness control

Performance Curves

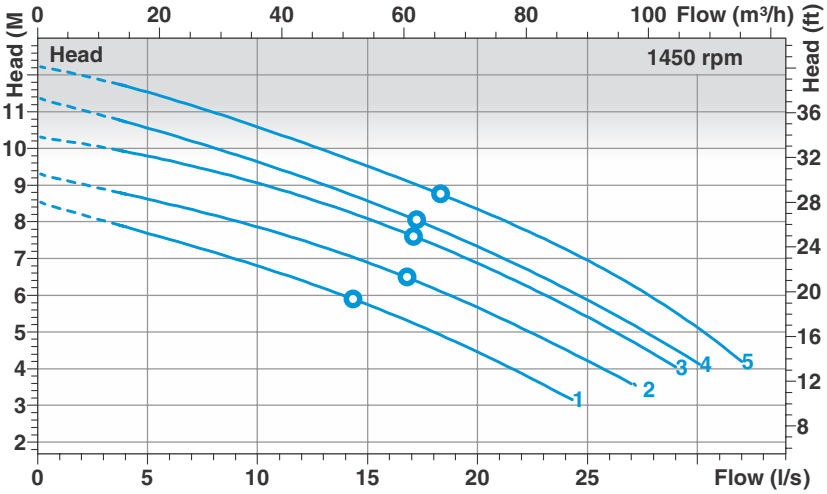

GENERAL FEATURES									PERFORMANCES									
SN	Model - Type	P1 kW	P2 kW	Volt	Amp	rpm	DN	Ø mm	l/sec	0	4	8	12	16	20	24	28	32
									m³/h	0	14	29	43,2	57,6	72	86,4	100,8	115,2
1	KGA - CV22 - GT - 4	3	2,2	3x400	5,5	1450	100	80		8,6	7,8	7,2	6,4	5,6	4,5	3,3		
2	KGA - CV35 - GT - 4A	4	3,5	3x400	7,5	1450	100	80		9,4	8,7	8,2	7,6	6,8	5,7	4,5	3,6	
3	KGA - CV35 - GT - 4	4	3,5	3x400	8	1450	100	80	m	10,3	9,8	9,4	8,8	8	6,9	5,8	4,4	
4	KGA - CV42 - GT - 4	4,4	4,2	3x400	9,2	1450	100	80		11,4	10,7	10	9,3	8,4	7,3	6,4	4,9	
5	KGA - CV55 - GT - 4	6	5,5	3x400 Δ	11	1450	100	80		12,3	11,7	11	10,2	9,4	8,4	7,2	6	4,2

INSTALLATION SIzES				
SN	Model - Type	A max	V	KG
1	KGA - CV22 - GT - 4	462	100	52
2	KGA - CV35 - GT - 4A	610	100	55
3	KGA - CV35 - GT - 4	610	100	55
4	KGA - CV42 - GT - 4	610	100	55
5	KGA - CV55 - GT - 4	580	100	59

* The last digit of model name (4) denotes 4 pole (1450 rpm)

Dimension Drawings

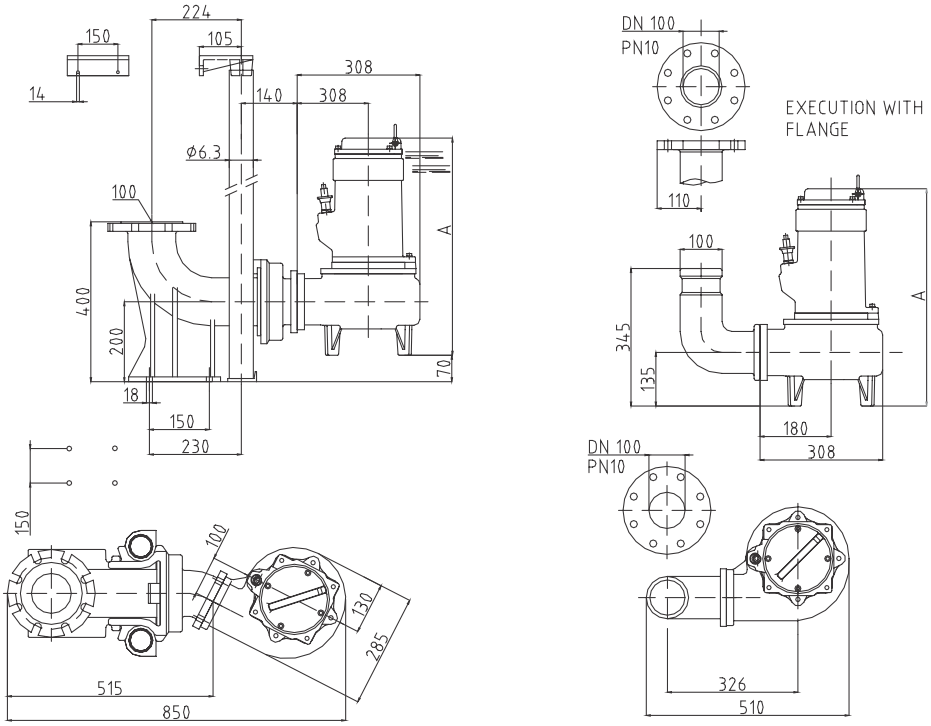

SUBMERSIBLE PUMPS - Grinder

KGT Series
0.75 - 9.5 kW

Discharge size
1"½ - DN 50

Technical Features

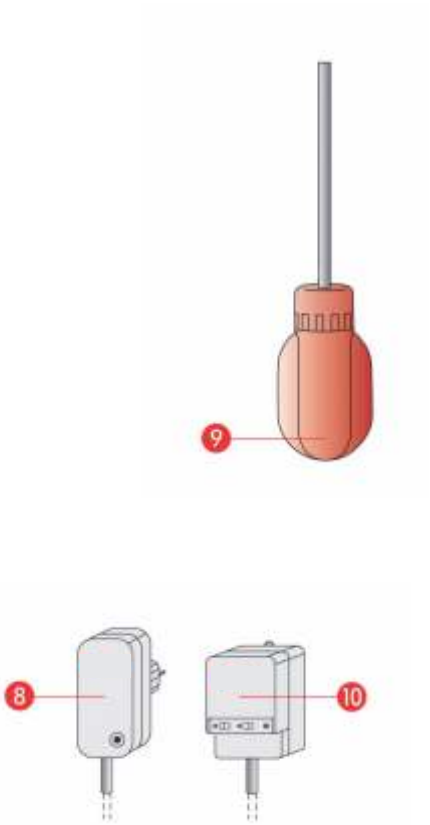

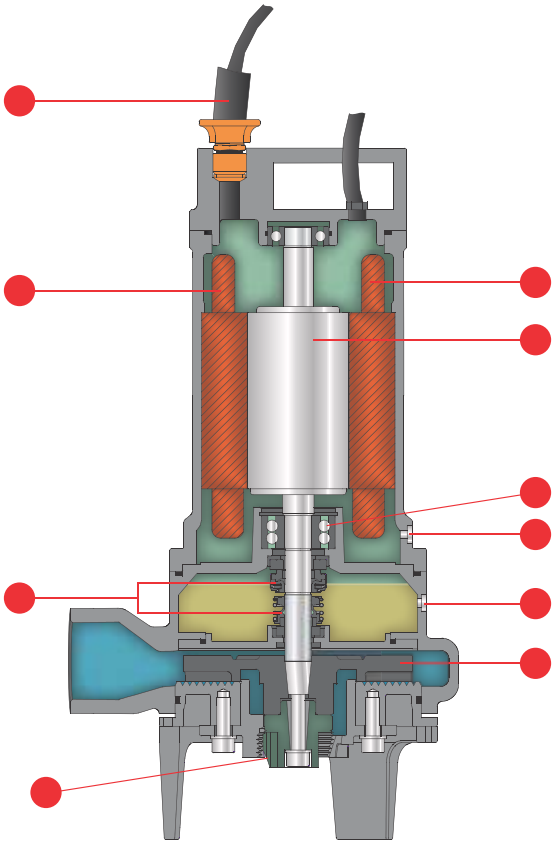

1. Fully submersible pressure tight electric motor
   Insulation class H. Protection degree IP 68
   Speed: 2850 rpm. Voltage: single-phase 1x230V-50 Hz
   Three-phase 3x380/415V-50 Hz.
   Different voltage and frequency on request.
2. Shaft in stainless steel AISI 420
3. Bearings over-dimensioned long-life
4. Double mechanical seal in oil chamber
   Water side: silicon carbide/silicon carbide
   Motor side: graphite/alumina
5. Open Impeller with cutting device
6. Cable H07RNF
7. Thermal protection embedded in winding
8. Plug with capacitor
9. Float switch regulator
10. AET-AEM electrical gear for three-phase and single-phase execution
11. Oil inspection plug
12. Hole for the motor watertightness control
13. Cutting device

Performance Curve

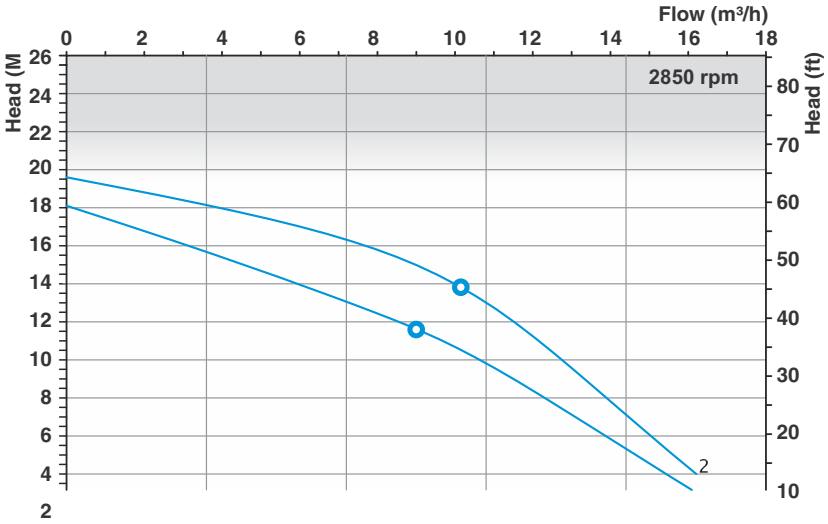

GENERAL FEATURES												PERFORMANCES							
SN	Model - Type	P1 kW	P2 kW	Volt	µF	Amp	rpm	DN	Ø mm	V	KG	l/sec	0	1	2	3	4	4,5	5
												m³/h	0	4	7	10,8	14,4	16,2	18
1	KGT - CV07 - CM(AF)	0,9	0,75	1x230-240	22	5,5	2850	1" 1/2	6	40N	24	m	17	14	9,7	5,7	3,5	2	
1	KGT - CV07 - CT	0,9	0,75	3x400-415		2,7	2850	1" 1/2	6	40N	24		17	14	9,7	5,7	3,5	2	
2	KGT - CV11 - CM(AF)	1,3	1,1	1x230-240	30	7,5	2850	1" 1/2	6	40N	25		23	21	17,5	13	7	4	
2	KGT - CV11 - CT - A	1,3	1,1	3x400-415		3,2	2850	1" 1/2	6	40N	25		23	21	17,5	13	7	4	

Dimension Drawings

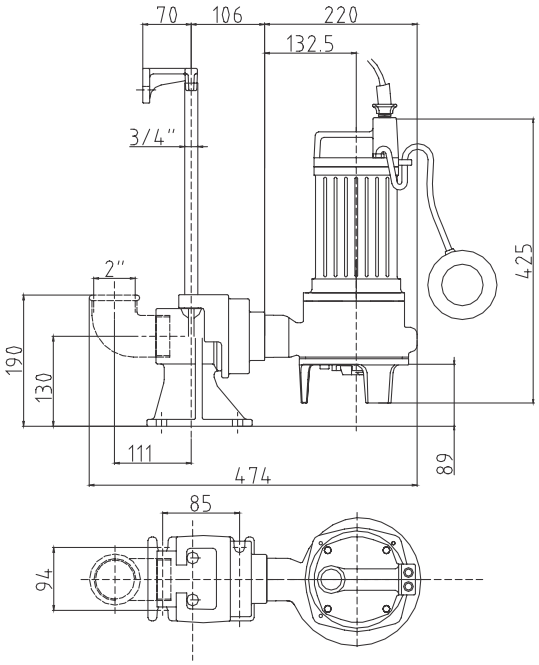

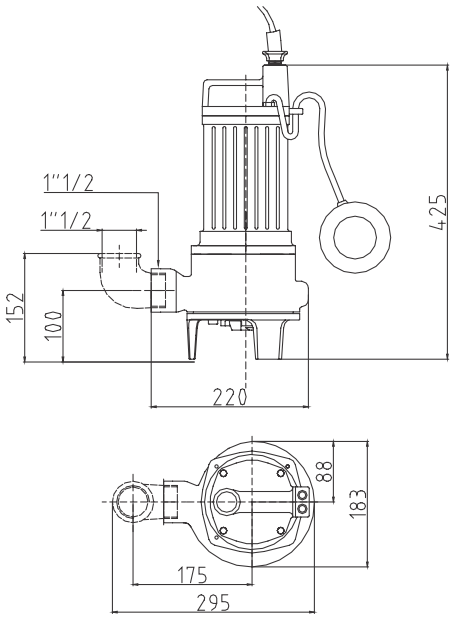

Installation Type

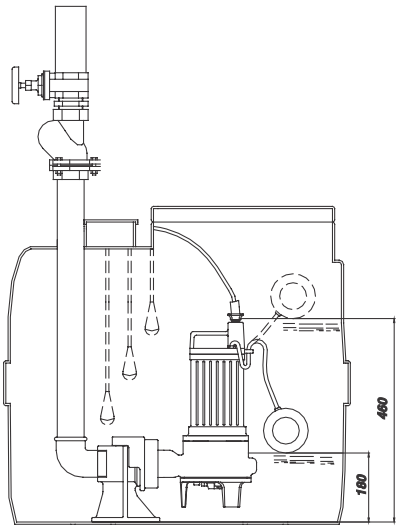

Technical Features

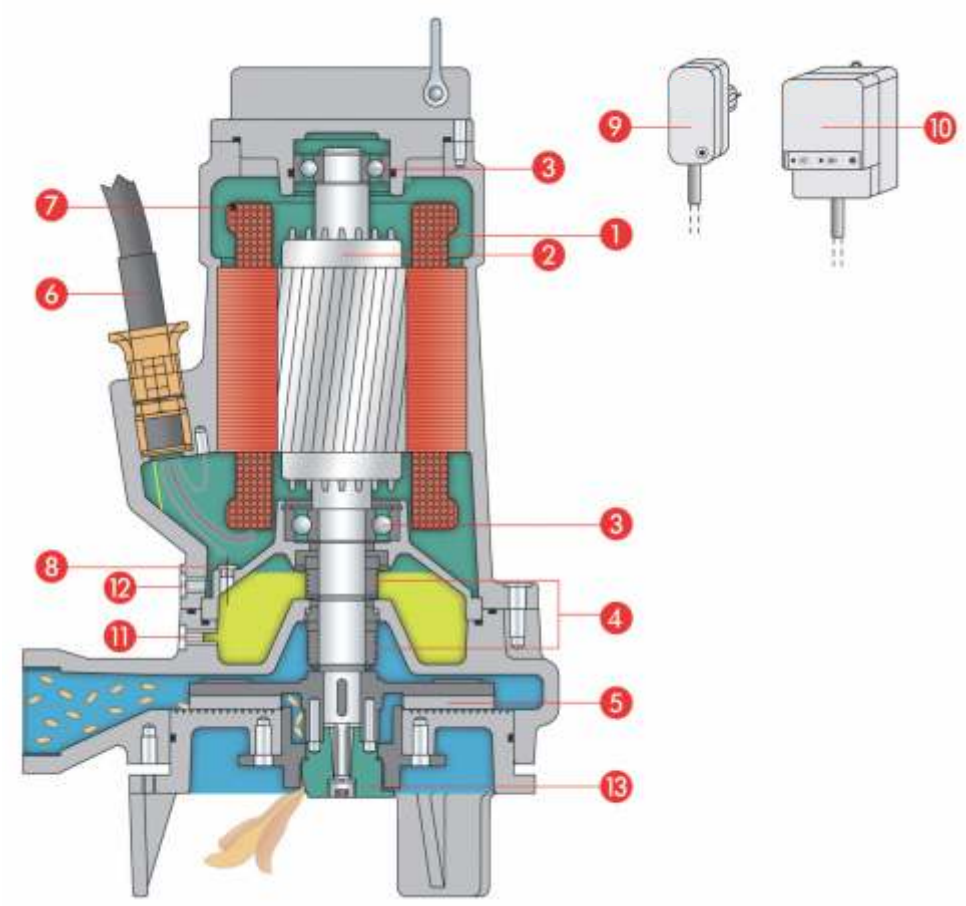

1. Fully submersible pressure tight electric motor
   Insulation class H. Protection degree IP 68
   Speed: 2850 rpm. Voltage: single-phase 1x230V-50 Hz
   Three-phase 3x380/415V-50 Hz.
   Different voltage and frequency on request. A
2. Shaft in stainless steel AISI 420
3. Bearings over-dimensioned long-life
4. Double mechanical seal in oil chamber
   Water side: silicon carbide/silicon carbide
   Motor side: graphite/alumina
5. Open Impeller with cutting device
6. Cable H07RNF
7. Thermal protection embedded in winding
8. Oil chamber probe
9. Plug with capacitor
10. AET-AEM electrical gear for three-phase and single-phase execution
11. Oil inspection plug
12. Hole for the motor watertightness control
13. Cutting device

Performance Curve

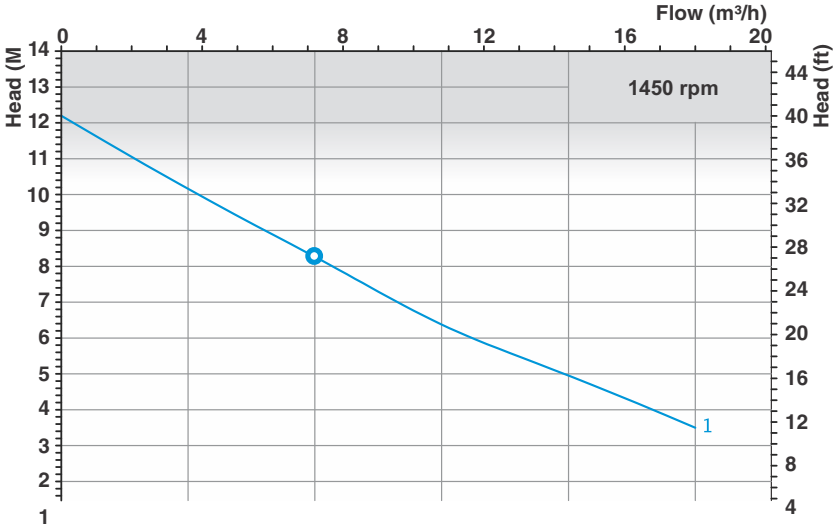

GENERAL FEATURES											PERFORMANCES						
SN	Model - Type	P1 kW	P2 kW	Volt	Amp	rpm	DN	Ø mm	V	KG	l/sec	0	1	2	3	4	5
											m³/h	0	4	7	10,8	14,4	18
1	KGT - CV09 - CT - 4	1,2	0,9	3X400	2,5	1450	1"1/2	7	40N	39	m	11,8	10	8,5	6,7	5	3,5

* The last digit of model name (4) denotes 4 pole (1450 rpm)

Dimension Drawings

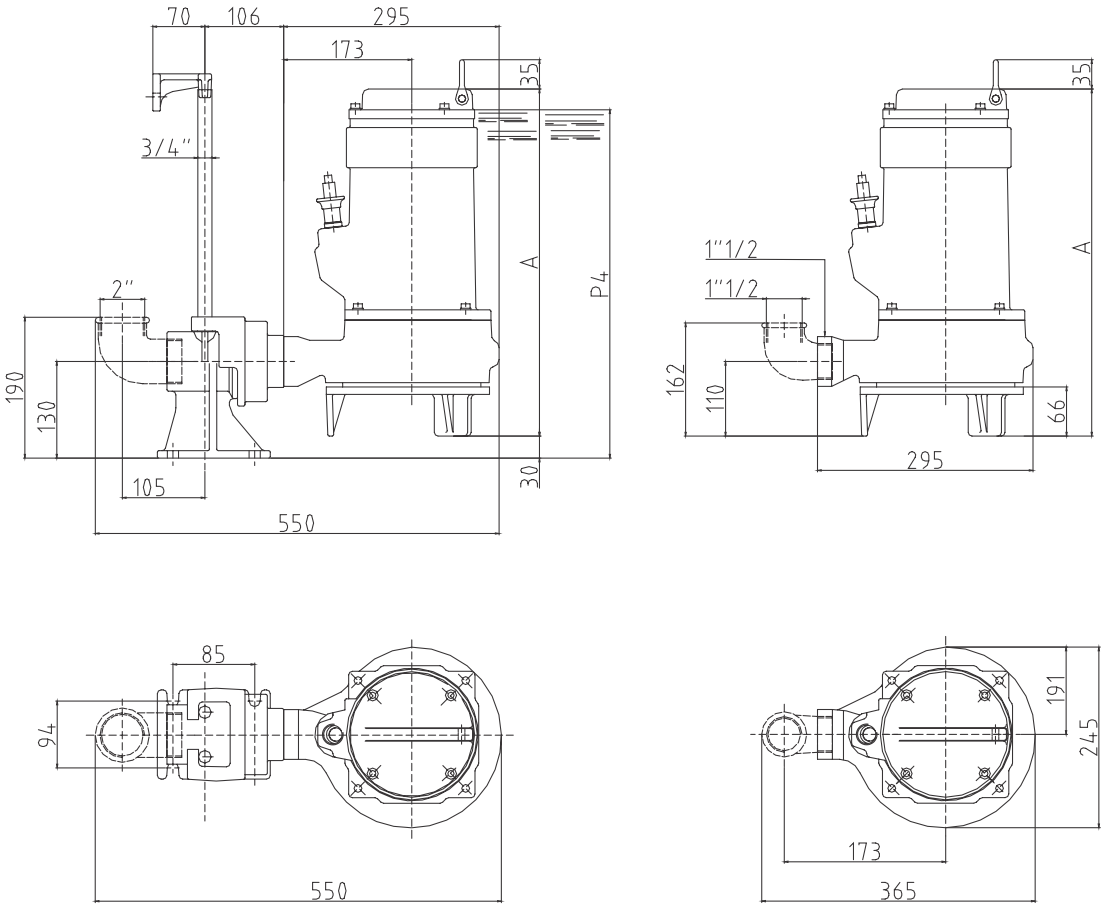

Performance Curves

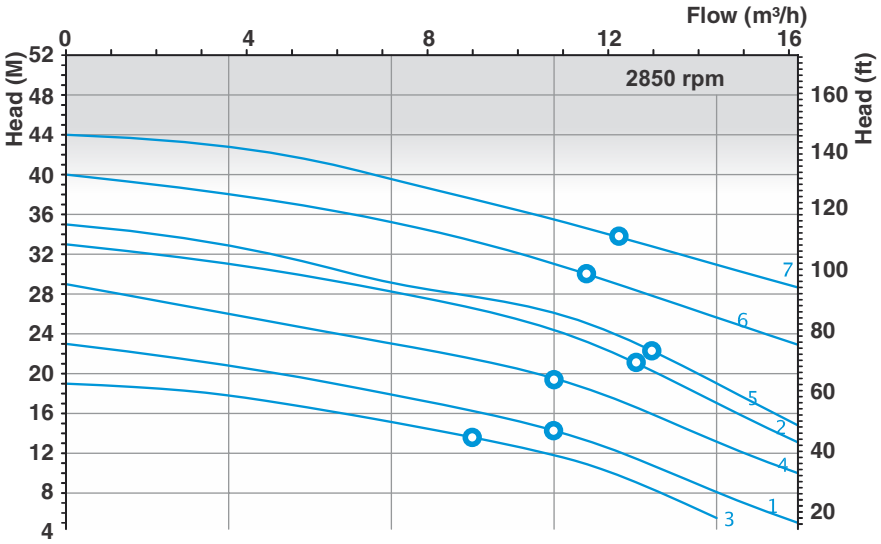

GENERAL FEATURES										PERFORMANCES							
SN	Model - Type	P1 kW	P2 kW	Volt	µF	Amp	rpm	DN	Ø mm	l/sec	0	1	2	3	4	4,5	5
										m³/h	0	4	7	10,8	14,4	16,2	18
1	KGT - CV16 - CM	2	1,6	1x230-240	40	10	2850	1"1/2	7		23,5	21,5	17,5	13,5	8	5	
2	KGT - CV23 - CM	2,9	2,3	1x230-240	50	13,5	2850	1"1/2	7		32	29,5	26,7	22	17	13,5	
3	KGT - CV11 - CT	1,5	1,1	3x400-415		3	2850	1"1/2	7		21,9	19	16	12,3	7		
4	KGT - CV18 - CT	2,2	1,85	3x400-415		4,5	2850	1"1/2	7	m	28	26	22	17,5	12,5	10	
5	KGT - CV26 - CT	3,3	2,6	3x400-415		5,9	2850	1"1/2	7		35,5	32,5	29	24,5	19	15	
6	KGT - CV36 - CT	4	3,6	3x400-415		7	2850	1"1/2	7		42	39	35	30,5	25,5	23	
7	KGT - CV40 - CT	5	4	3x400-415		9	2850	1"1/2	7		48	45	41,5	37	32	30	

INSTALLATION SIZES					
SN	Model - Type	A max	P4	V	KG
1	KGT - CV16 - CM	455	470	40N	44
2	KGT - CV23 - CM	470	485	40N	54
3	KGT - CV11 - CT	420	435	40N	38
4	KGT - CV18 - CT	420	435	40N	39
5	KGT - CV26 - CT	455	470	40N	44
6	KGT - CV36 - CT	470	485	50N	54
7	KGT - CV40 - CT	470	485	50N	55

Dimension Drawings

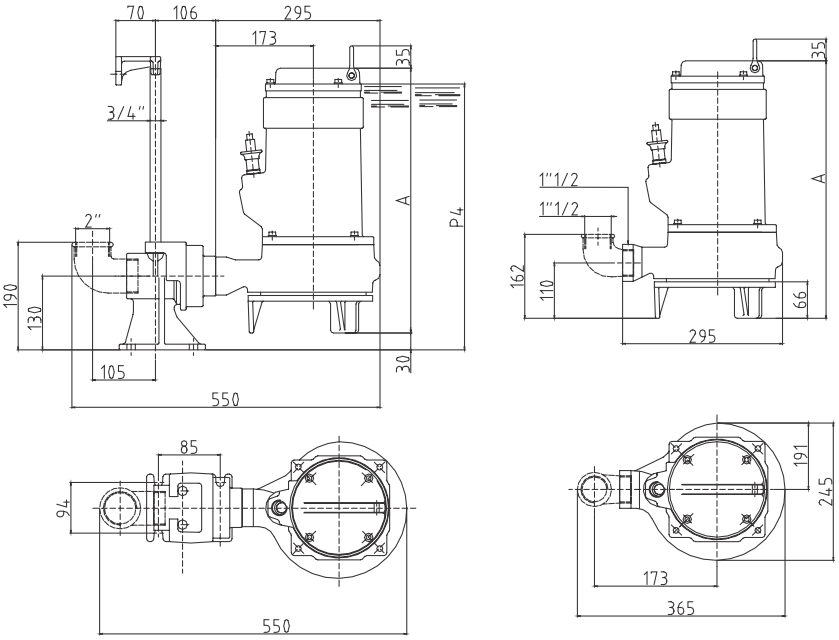

Performance Curves

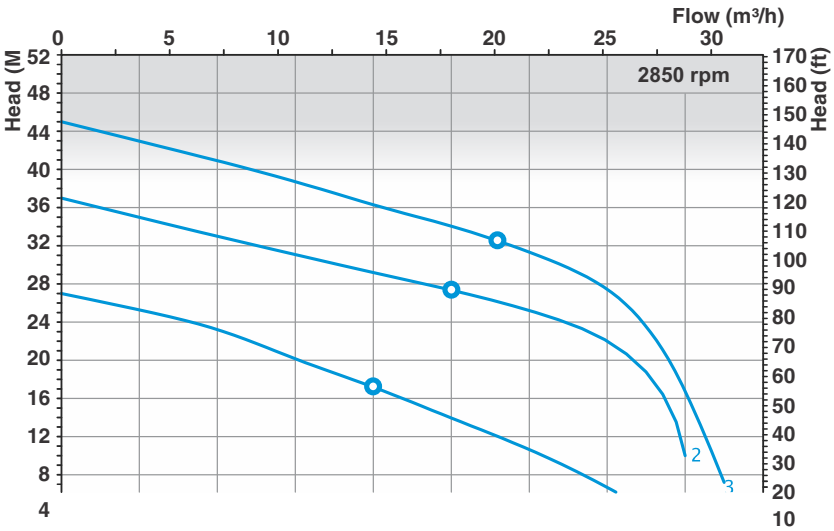

GENERAL FEATURES									PERFORMANCES											
SN	Model - Type	P1 kW	P2 kW	Volt	Amp	rpm	DN	Ø mm	l/sec	0	1	2	3	4	4,5	5	6	7	8	8,5
									m³/h	0	4	7	10,8	14,4	16,2	18	21,6	25,2	28,8	30,6
1	KGT - CV30 - CT - HF	3	2,6	3x400-415	5,5	2850	1"1/2	7	m	27	25,5	22,5	20	17	16	14	11	7	2	
2	KGT - CV40 - CT - HF	4,5	4	3x400-415	8	2850	1"1/2	7		36	33,5	29,5	28	26	25	23	20,5	17	8	
3	KGT - CV55 - CT - HF	6	5,5	3x400-415	12	2850	1"1/2	7		46,3	43,5	42	38,5	36,3	35,7	34	31,7	26,6	16,4	6,6

INSTALLATION SIZES				
SN	Model - Type	A max	V	KG
1	KGT - CV30 - CT - HF	455	40N	39
2	KGT - CV40 - CT - HF	470	50N	54
3	KGT - CV55 - CT - HF	470	50N	55

Dimension Drawings

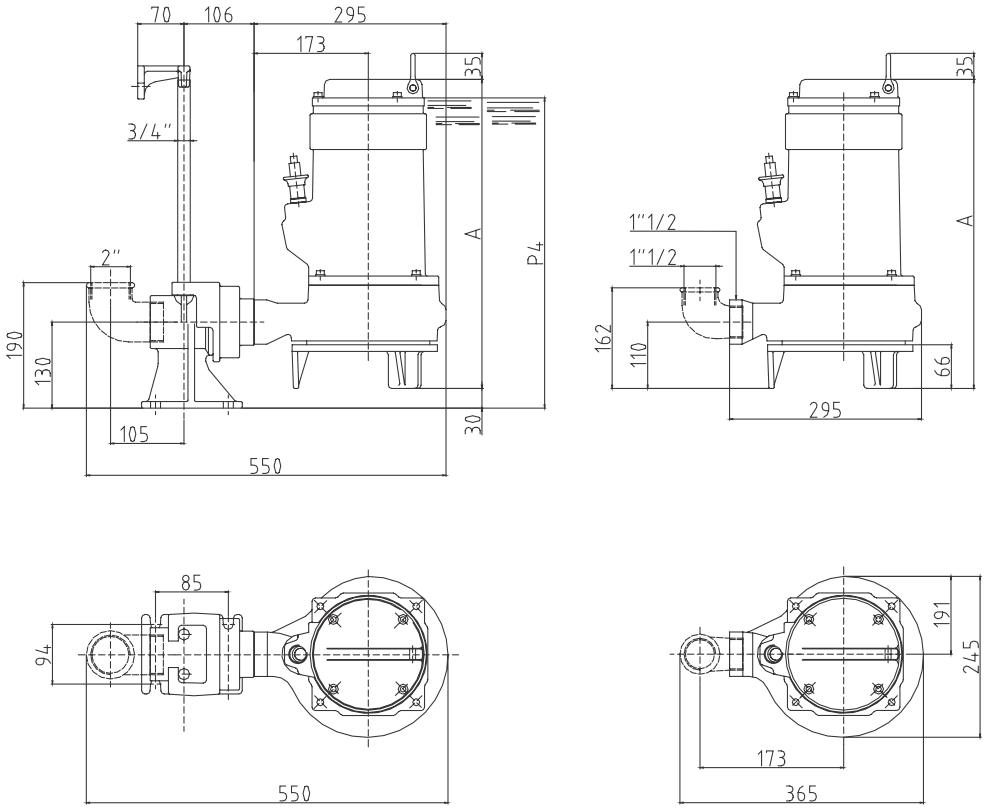

Performance Curves

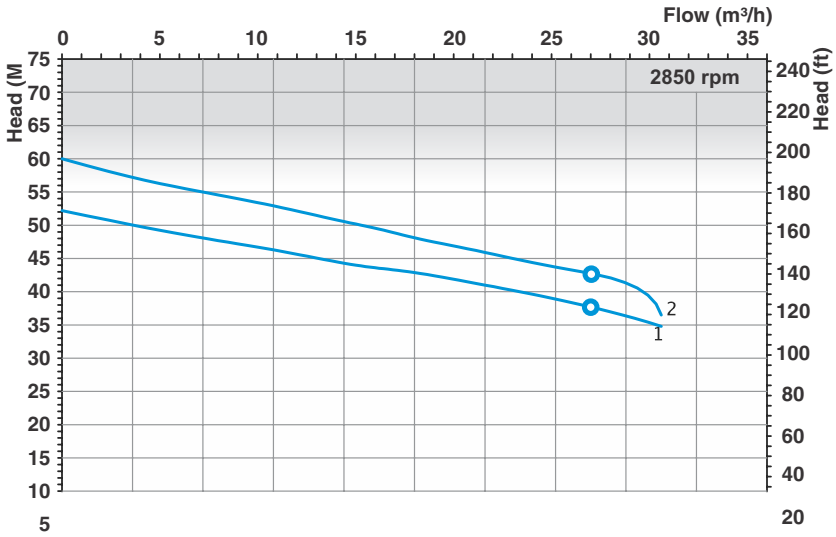

GENERAL FEATURES											PERFORMANCES											
SN	Model - Type	P1 kW	P2 kW	Volt	Amp	rpm	DN	Ø mm	V	KG	l/sec	0	1	2	3	4	4,5	5	6	7	8	8,5
											m³/h	0	4	7	10,8	14,4	16,2	18	21,6	25,2	28,8	30,6
1	KGT - CV72 - DT - HF	8	7,2	3x400-415	15	2850	50	7	50K	110	m	52	49,5	45,5	45	43	42	41	39	36	30	20
2	KGT - CV95 - DT - HF	11	9,5	3x400-415	19	2850	50	7	50K	110		68	65,5	60,5	60	58	57	56	53	50	32	4

Dimension Drawings

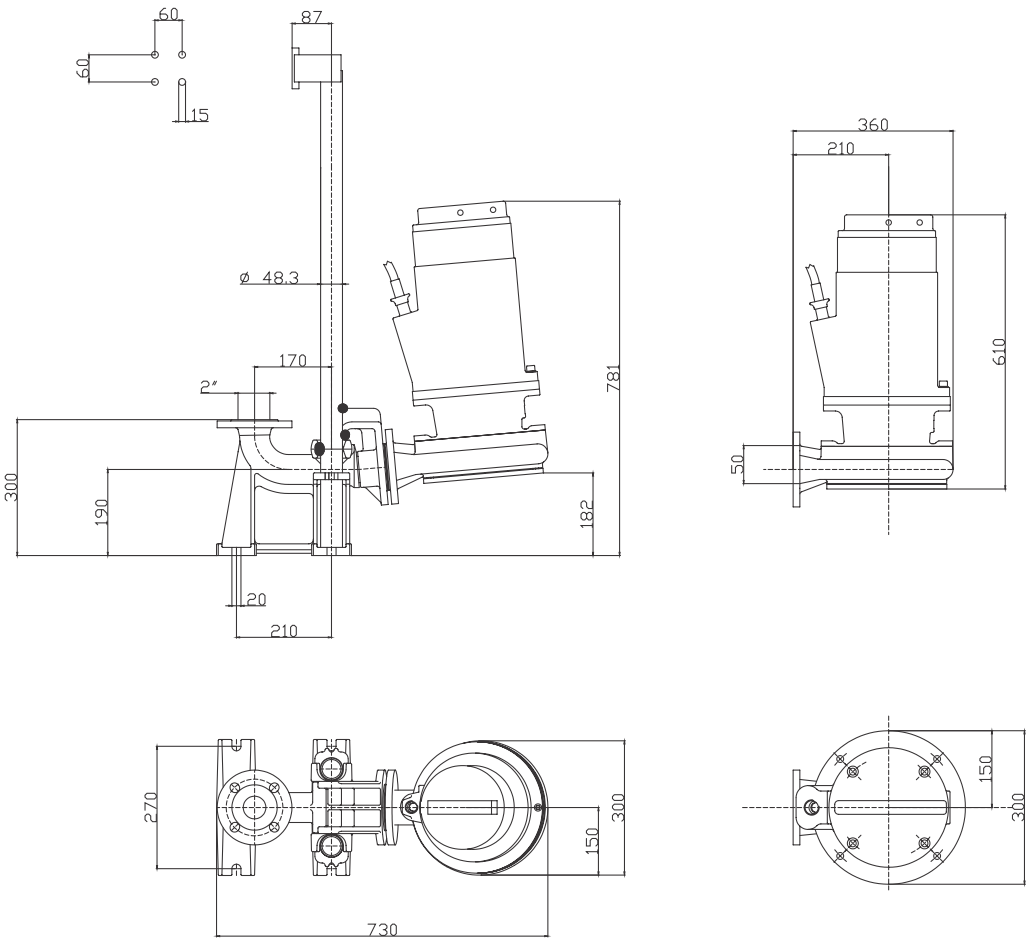

SUBMERSIBLE AGITATORS

KAG Series
0.8 - 22 kW

Flow
1.5 - 10 m

Technical Features

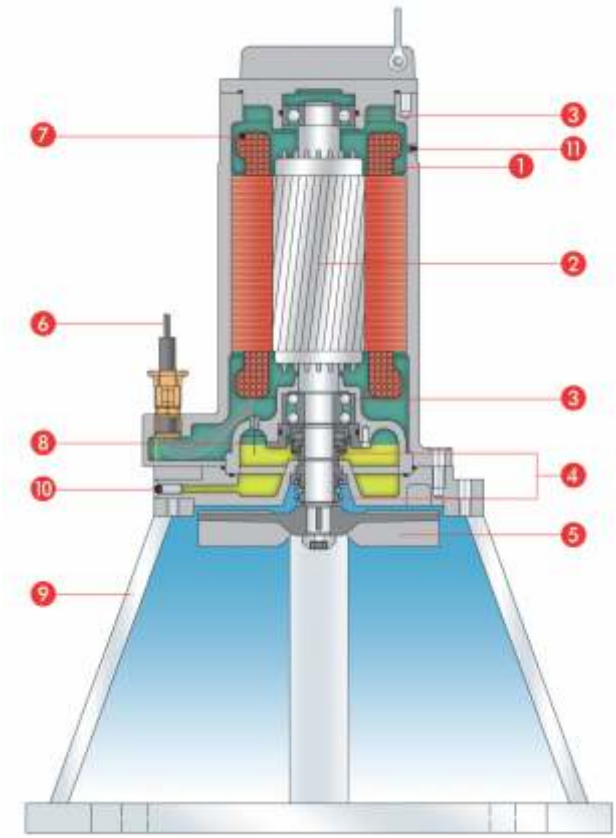

1. Fully submersible pressure tight electric motor
   Insulation class H. Protection degree IP 68
   Speed: 1450 rpm.
   Voltage: Three-phase 3x380/415V-50 Hz.
   Different voltage and frequencyon request.
2. Shaft in stainless steel AISI 420
3. Bearings over-dimensioned long-life
4. Double mechanical seal in oil chamber
   Water side: silicon carbide/silicon carbide
   Motor side: graphite/alumina (curve 1-2) silicon carbide/silicon carbide (curve 3-6)
5. Cast iron vortex impeller at high efficiency
6. Cable H07RNF
7. Thermal protection embedded
8. Oil chamber probe
9. Footring
10. Oil inspection plug
11. Hole for the motor watertightness control

* In view of continuous developments, the information / descriptions / specifi cations / illustrations are subject to change without notice.

Dimension Drawing

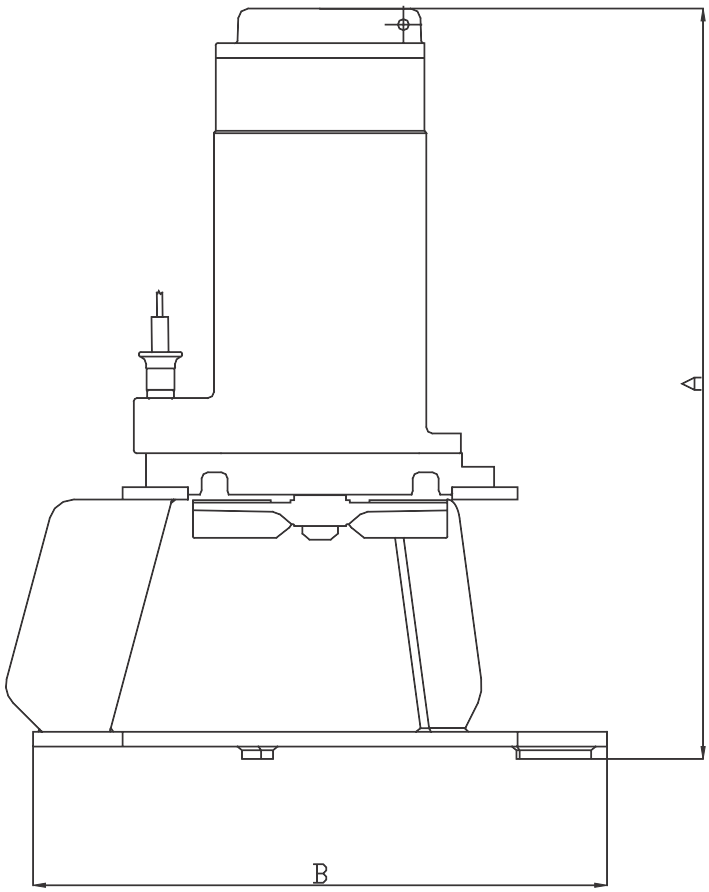

GENERAL FEATURES								PERFORMANCES			
SN	Model - Type	P1 kW	P2 kW	Volt	Amp	µF	rpm	Application field (m)	A mm	B mm	KG
A	KAG - CV08 - T - A	0,9	0,8	1x230	5	30	2850	1,5	325	300	23
B	KAG - CV08 - T	0,9	0,8	3x400	2,1		2850	1,5	325	300	23
C	KAG - CV11 - T - A	1,5	1,1	1x230	7,1	30	2850	2	325	300	18
D	KAG - CV11 - T	1,4	1,1	3x400	3,2		2850	2	325	300	18
C	KAG - CV08T - 4A	1	0,8	1x230	4	30	1450	1	375	300	27
E	KAG - CV08 - T - 4	1	0,8	3x400	2		1450	1,5	375	300	27
F	KAG - CV11- T - 4	1,5	1,1	3x400	2,5		1450	2	406	300	28
1	KAG - CV15 - T - 4	2,1	1,5	3x400	3,6		1450	3	406	465	47
2	KAG - CV22 - T - 4	3	2,2	3x400	5		1450	4	406	465	39
3	KAG - CV35 - T - 4	4,5	3,5	3x400	7,7		1450	5	560	465	57
4	KAG - CV60 - T - 4	7,7	6	3x400 D	13,1		1450	7	670	465	85
5	KAG - CV75 - T - 4	9,3	7,5	3x400 D	15,1		1450	8	704	465	95
6	KAG - CV110 - T - 4	12,5	11	3x400 D	18		1450	9	800	510	141
7	KAG - CV220 - T - 4	26,2	22	3x400 D	46		1450	10	900	850	250

*** The image represent actual product, though the colour of image and product may slightly differ.**

*** The last digit of model name (4) denotes 4 pole (1450 rpm)**

*** Performance details mentioned in the chart is approximate and it will deviate by ±5%**

*** In view of continuous developments, the information / descriptions / specifi cations / illustrations are subject to change without notice.**

NOTES

NOTES

YOU ARE LOOKING AT WHAT THE FUTURE IS COMING TO!

Genvik presents a stable of products for a new generation of customers and applications

KE-18CVP/M51

GENVIK
WE MAKE IT BETTER

ACNAL INDUSTRIES PRIVATE LIMITED
No.66/2, Athipalayam Road, Chinnavedampatti, Coimbatore - 641049, India.
Ph : +91 84894 22000. Email : sales@genvikpumps.com Website : www.genvikpumps.com

ISO | CE